PENTA

ELECTRICAL SAFETY PRODUCTS

Live working

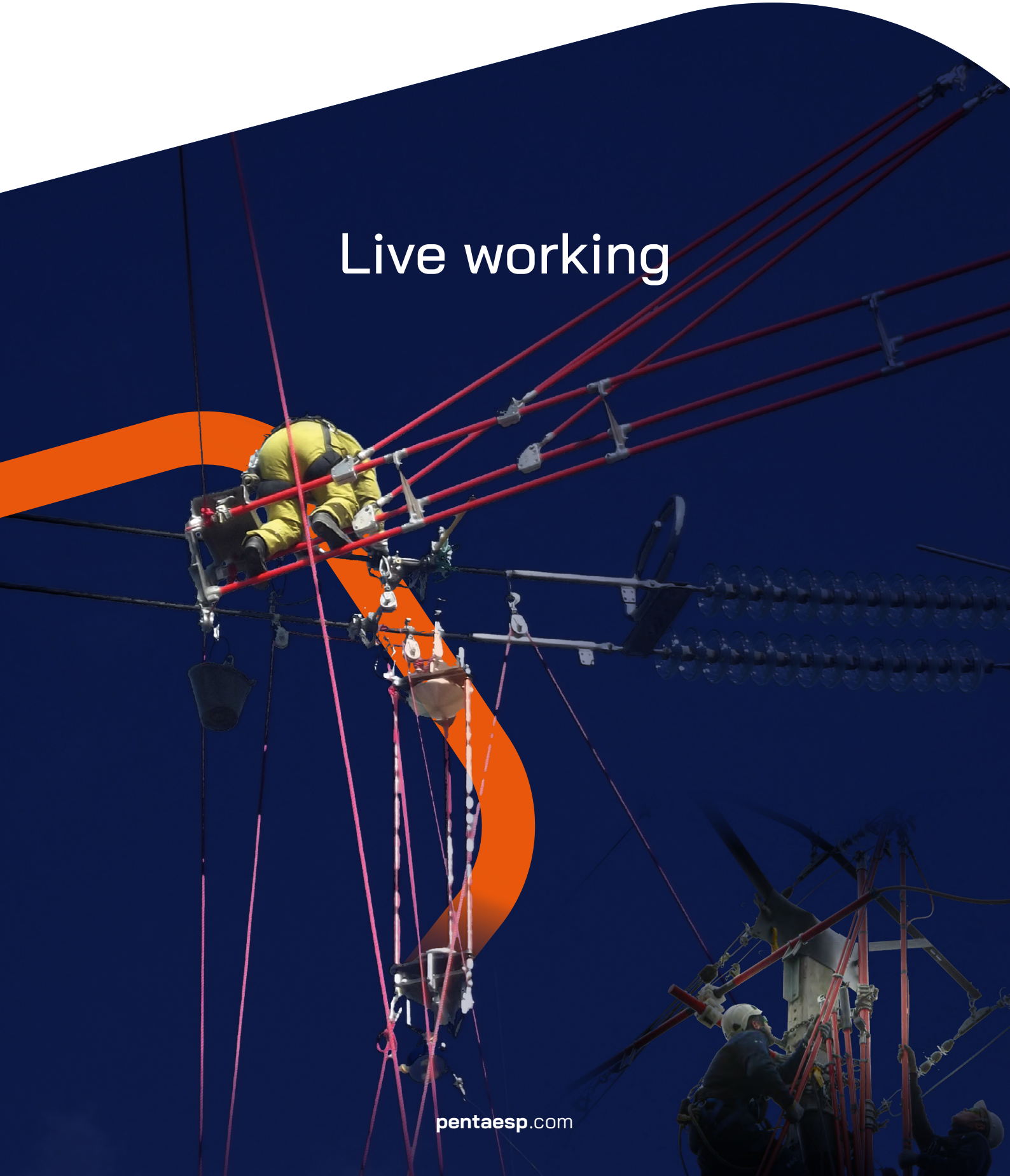

pentaesp.com

CONTENTS

Dear PENTA customers,

Our insulating tools comply with the latest international standards IEC / EN 60832-1.

They are all built on insulating tubes offering the best dielectric and mechanical performances and conforming to IEC 60855-1 & ASTM F711 standards.

For more than 70 years **PENTA previously known as FAMECA has been manufacturing high performance insulating composite tubes and accessories by industrialising its own manufacturing process**. The main advantages of the foam tube IEC 60855-1 compared to hollow tubes are :

- Its **resistance to moisture penetration** which makes it the ideal material for all-weather outdoor applications,
- **Its unique insulating and dielectric properties which**, whatever the climatic conditions, means that it is not a source of ignition when working in contact with or near live power lines.
- Its high mechanical strength and rigidity, which improves its life span and allows users to be more precise when handling.

FAMECA also offers **a wide range of tubes to meet various complementary customer requirements,** while always complying with the IEC 60855-1 standard for foam tubes, in order to provide our products with longevity and reliability and to continuously increase their essential safety function.

The permanent search for innovation in the service of our customers' solutions has enabled us in recent years to:

- To integrate a structural finish that further improves the mechanical properties of the tubes used for the poles in order **to further increase their longevity,**
- To formulate new finishing varnishes (almost non-existent with all our colleagues) Formulate new finishing varnishes (almost non-existent among all our colleagues) **which further increase the UV resistance, but also the hydrophobic and oleophobic properties** of the tube surface, thus reducing pollution and dirt on the poles while facilitating periodic maintenance,
- To be constantly **on the lookout for newmaterials** that will provide even more user benefits.
- All our accessories have been designed and tested to meet the most severe conditions of use.

PERSONAL PROTECTIVE EQUIPMENT

PERSONAL PROTECTIVE EQUIPEMENT (PPE)

SAFETY HELMET

FUNCTION AND USE
Safety helmet protects the wearer against accidental electrical contact.
For operators working up high or on the ground.

FEATURES
Polyethylene helmet without ventilation, deformable in case of impact.
Short visor cap.
4-point textile headband, adjustable by means of a rack and pinion or a slider.
Removable headband with comfort band.
Life span: 4 years.
Colour: white.

Catalog No.	**TC47BC**

TB19

TC52

SPECIAL BOOTS

FUNCTION AND USE
Special boots must be worn by fitters both on the ground and on the support or buket of a lift during the work.They protect fitters on the ground from the electrical risks of step voltage.Boots must be worn when it is raining or when the ground is covered with dew and, in general, whenever there is a risk that the leather of the shoe will become externally impregnated with moisture.The wearing of special footwear is limited to the network with a nominal voltage of 20 kV or less.

FEATURES
Leather upper with steel toe cap. The soles provide simultaneously:
- mechanical protection (anti-nail sole),
- electrical insulation (internal layer of insulating material).

Rubber boots, canvas lining:
- mechanical protection: steel shell and anti-nail sole,
- electrical insulation: insulating rubber boots.

Catalog No.	**TC52**
Catalog No.	**TB19**

LONG COMPOSITE INSULATING GLOVES

FUNCTION AND USE

Bicolor chlorinated long composite gloves for medium voltage live working operations (gloving method) Integrated mechanical protection no need of leather protector Bell cuff and ergonomic hand shape One piece only, with excellent leakage current properties (Category F) it is possible to work in wet conditions (if allowed by local regulations and work practices)

FEATURES

Long two-coloured chlorinated composite gloves for medium voltage contact work Length 800 mm - Sizes 09 and 10

CATEGORIES

- R : Acid, oil, ozone
- C :Extremely low temperature
- F : Leakage current

External color red and internal color Black

Catalog No.	Class	Thickness (mm)	Proof test voltage (V) / AC	Max operating voltage (V) / AC
GICN80-2/*	2	< 3,9	20 000	17 000
GICN80-3/*	3	< 4,2	30 000	26 500

* Add size 09 ou 10

Accessories (not included):
- Carrying case
- Rubber cleaner: 200 ml spray bottle. Specifically developed to properly clean rubber from dirt and dust. This cleaner does not alter the dielectric properties of the insulating gloves. It is recommended to wipe with a microfibre or disposable cloth.

Catalog No.	Accessories
RGX-SGL	Carriyng case
RGX1704/200	Rubber cleaner

ALL PURPOSE GLOVES

FUNCTION AND USE

Thanks to its technical characteristics, this glove is suitable for all major work requiring dexterity and a significant protection against mechanical risks including cut.

FEATURES

Constructron : seamless knitted pattern. Liner made up of high density polyethylene fibres (HDPE) mixed with other technical fibers (such as polyamide, wrapped glass fibres).
Elasticated knitted wrist.
Open back

Catalog No.	**G115N**

SAFETY GLASSES

FUNCTION AND USE

Live working, welding or soldering.
Can be worn with a helmet and integrated colourless shield for electricians.

FEATURES

Polycarbonate lens, with UV protection and IR filtration, Grade 3 tint,
Resistance to particles at medium speed (45m/sec),
Anti-scratch and anti-fog treatment,
Ergonomic temples with soft material, Resistance to extreme temperatures (-5°C to + 55°C), No metal parts, CE mark.

Accessory (not supplied): soft case for glasses (ref. E62)

Catalog No.	**TP05B3**

PERSONAL PROTECTIVE EQUIPEMENT (PPE)

CONDUCTIVE SUITS

FUNCTION AND USE

The use of all these garments is limited topower-frequency electrical networksrated voltage from 132 kV a.c. up to 800 kV a.c. or ± 600 kV d.c. (Class 1)and, using the face shield, up to 1000 kV a.c. or ± 800 kV d.c. (Class 2).
Conductive clothing is used to limitthe circulation of capacitive currents in the operator's body in the presence of intense electric fields.In all cases, gloves and socksmust be used with the overalls or jacketand trousers.
The press studs, which ensureelectrical continuity between the coverall, jacket ortrousers and the various accessories,must be snapped on (e.g. gloves, socks andshoes).
When working at potential, the bonding device, isconnected to the conductive garment by means of stainless steel screws and wing nuts on the left and right of the suit or jacket.
Then the clamp must be connected to the phase on which the operation is taking place. When the operator is on the move the bonding device can be disconnected and reconnectedas long as the operator remains connected by holding the conductor with his gloves.
Translated with www.DeepL.com/Translator (free version)

CONDUCTIVE CLOTHING

Conductive fabric made of synthetic fibres wefted with conductive silver thread or conductive composite fibres.
Composition :

- coverall or jacket and trousers
- bonnet with visor and collar integrated into the coverallor jacket by seams.
- gloves attached to the suit or jacketwith press studs, adjustable to three different positions,
- socks, attached to the suit ortrousers with press studs, adjustable inthree different positions,
- Face Screen Mask, assembled to thesuit or jacket with press studs(compulsory only for ClassClass 2 conductive clothing).

Several sizes are available.

Catalog No.	Description	Size
FA32-taille	Jacket and Trousers	S, M, L, XL, 2XL, 3XL
FE45-taille	Flight Suit Style	S, M, L, XL, 2XL, 3XL
FE46-L	Conductive Gloves	Fits S, M & L Glove Sizes
FE46-XL	Conductive Gloves	Fits XL & Up Glove Sizes
FA15	Face Screen Mask	One Size Fits All

CONDUCTIVE BOOTS

The conductive boots are made in fine leather for confort.
They are supplied with braided copper wires and calf straps.
High-quality, treated, water-resistant Italian leather for the boot. Oil-resistant and graphite rubber sole ensure the best conductive properties.The twisted copper cord integrated into the sole and the copper leg strapthat connect to the pants or suit ensure a perfect conductivity.
The calf strap is replaceable. The twisted copper cord in the sole can be replaced when broken by returning the conductive boots to the manufacturer.
Steel toecap conforms to safety toecap footwear.
Padded ankle protection for easy wearing by climbers.
Pull loop at the back of the boot for ease of wearing.Breathable suede lining for comfort.
Stainless steel lace hooks for easy and secure fastening.
Fully compliant with IEC 60895:2020-04, EN ISO 20345:2012 and EN ISO20347:2012.
Translated with www.DeepL.com/Translator (free version).

FA48-US-size	**Shoe Size US***	8	8.5	9	9.5	10	10.5	11	11.5	12	13
FA48-EU-size	**Shoe Size EU***	41	41	42	42	43	43	44	44	45	46
FA48-UK-size	**Shoe Size UK***	7.5	8	8.5	9	9.5	10	10.5	11	11.5	12.5

* Sizes smaller and larger than what is on the table are available for additional nominal charge.
It is recommended that the user wear an ordinary pair of socks under the conductive socks.
So the next shoe size may be desired.

CONDUCTIVE SOCKS

Sock Size	S	M	L	XL	2XL	3XL
Fits Men's Shoe Size	41	41-42	42-43	43-44	44-45	46-47
Catalog No.	**FE47-S**	**FE47-M**	**FE47-L**	**FE47-XL**	**FE47-2XL**	**FE47-3XL**

BONDING DEVICE

Metal clamp, connected to an insulated copper braid with silicone sleeve with a connection lug.
The lug is thightend to the to the conductive garment at operator waist.
The clamp can slide on the conductor.

Catalog No.	Description
FA47	Standard Metal Bonding Clamp with Copper Le
FL-50CU	Quick Draw Metal Bonding Clamp with Copper Lead
FL-50-CUIN	Quick Draw Metal Bonding Clamp with Copper Lead & Insulating Rod
FL50-BS	Quick Draw Metal Bonding Clamp to be used with Bonding Strap (not included)
FE99	Pair of ArgenTwo™ Fabric Elastic Bonding Straps

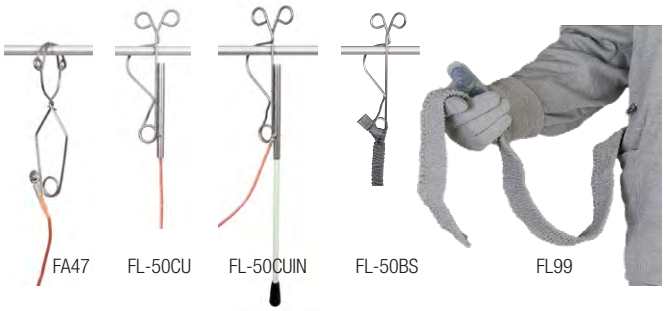

PERSONAL PROTECTIVE EQUIPEMENT (PPE)

DESIGNED TO BE USED IN WARMER CLIMATES

Personalized removable name tag provided at no charge. Specify at the time of the order.

Jacket and Trousers

Undergarment

Flight Suit Style

CONDUCTIVE SUITS FROM CARRARO TECNO CONDUCTIVE WEAR

FUNCTION AND USE

The use of all these garments is limited topower-frequency electrical networksrated voltage from 132 kV a.c. up to 800 kV a.c. or ± 600 kV d.c. (Class 1)and, using the face shield, up to 1000 kV a.c. or ± 800 kV d.c. (Class 2).

SUPERIOR COMFORT & PERFORMANCE

Introducing the new line of ArgenTwo™ Conductive Suits from Carraro Tecno Conductive Wear. The superior comfort is designed into the fabric and with best electrical performance by using Patent Pending, newly designed, highly flexible ultra-fine silver fibers, the best electrically conducting element on earth, woven into a very soft, comfortable fabric. The new design of ArgenTwo thread has made the fabric 50% lighter as compared to the classic fabric. These innovations make the ArgenTwo Suit highly ideal for use in the warmer and more humid environments.

Composition :

- flight Suit Style or Jacket and Trousers
- undergarment (Long Sleeve Top & Pants)
- coverall or jacket and trousers
- bonnet with visor and collar integrated into the coverallor jacket by seams
- gloves attached to the suit or jacketwith press studs, adjustable to three different positions,
- leather overglove to increase the performance and durability of the knitted FH14 conductive glove. NOTE: Do not use a third party leather overglove protector unless approved for use by Carraro Tecno.,
- socks, attached to the suit ortrousers with press studs, adjustable inthree different positions,
- face Screen Mask, assembled to thesuit or jacket with press studs(compulsory only for ClassClass 2 conductive clothing).

Several sizes are available.

Catalog No.	Description	Size
FH11-taille	ArgenTwo Jacket and Trousers	S, M, L, XL, 2XL, 3XL
FH05-taille	ArgenTwo Flight Suit Style	S, M, L, XL, 2XL, 3XL
FL27-taille	Undergarment	S, M, L, XL, 2XL, 3XL
FH14-L	ArgenTwo Knitted Conductive Gloves	Fits S, M & L Glove Sizes
FH14-XL	ArgenTwo Knitted Conductive Gloves	Fits XL & Up Glove Sizes
FL03-L	Leather Glove Protector, White	Fits S, M & L Glove Sizes
FL03-XL	Leather Glove Protector, White	Fits XL & Up Glove Sizes
FA15-0571	ArgenTwo Face Screen Mask	One Size Fits All

Each conductive suit comes in its own carrying and storage case. Cases are made of heavy-duty tear-resistant nylon fabric.

CONDUCTIVE BOOTS

FA62 Boots — New half height, comfortable fine leather lineman conductive boots with Snap-On Removable Braided Copper Leads & Calf Straps. These lighter weight boots have steel toes for safety and sole shanks for comfort while wearing them for long periods of time. Boots Meet IEC 60895:2020 Standard.

FA62-US-size	**Shoe Size US***	8	8.5	9	9.5	10	10.5	11	11.5	12	13
FA62-EU-size	**Shoe Size EU***	41	41	42	42	43	43	44	44	45	46
FA62-UK-size	**Shoe Size UK***	7.5	8	8.5	9	9.5	10	10.5	11	11.5	12.5

* Sizes smaller and larger than what is on the table are available for additional nominal charge.
It is recommended that the user wear an ordinary pair of socks under the conductive socks.
So the next shoe size may be desired.

CONDUCTIVE SOCKS

Sock Size	S	M	L	XL	2XL	3XL
Fits Men's Shoe Size	7	8-9	9,5-11	11,5-13	14-15	16
Catalog No.	**FH15-S**	**FH15-M**	**FH15-L**	**FH15-XL**	**FH15-2XL**	**FH15-3XL**

BONDING DEVICE

Metal clamp, connected to an insulated copper braid with silicone sleeve with a connection lug.
The lug is thightend to the to the conductive garment at operator waist.
The clamp can slide on the conductor.

Catalog No.	Description
FA47	Standard Metal Bonding Clamp with Copper Le
FL-50CU	Quick Draw Metal Bonding Clamp with Copper Lead
FL-50-CUIN	Quick Draw Metal Bonding Clamp with Copper Lead & Insulating Rod
FL50-BS	Quick Draw Metal Bonding Clamp to be used with Bonding Strap (not included)
FE98	Pair of ArgenTwo™ Fabric Elastic Bonding Straps

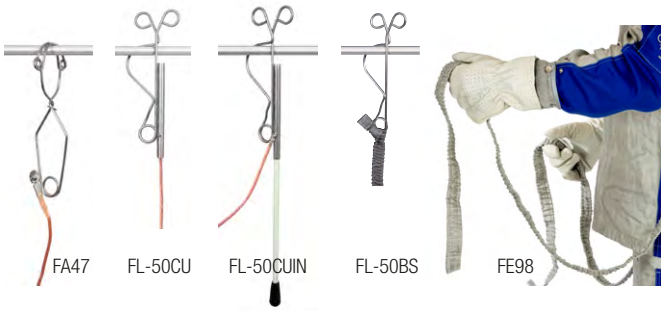

FULL BODY HARNESS WITH 180° SEAT BELT FOR HVA LIVE WORKING

FUNCTION AND USE

Personal protective equipment against falls from a height.
Fall arrest harness for fitters when working at height on power line supports, TST HTA, with work positioning belt and harness.
Lifetime of the equipment 10 years (from date of manufacture).

FEATURES

EN 361 / EN 358
Harness with 2 fall arrest attachment points, 1 metal back dice and 2 sternum buckles in webbing to be joined.
Incorporating a 180° rotation work positioning belt with two lateral metal hooking points, connected to a rigid harness by adjustable straps.
The connection between the belt and the harness offers optimal support to the user, limiting the need to replace the harness during work.
Elasticated shoulder straps adjusted by spring loaded metal buckles.
Adjustment and closure of the belt, thigh straps and Bavarian belt by automatic metal buckles with locking indicatorFall indicators on the back straps.
3D mesh comfort pad for the harness, shoulder straps and back for better breathabilityWide, comfortable waist belt with hook and loop closure.
It ensures a good posture when holding on to the work, integrating accessory holders and a transparent identification pocket.
Movable loops to hold the ends of the adjustable straps.

Catalog No.	Size	Weight
H1ATST-PT	S	3,2 Kg
H1ATST-TM	M-XL	3,4 Kg
H1ATST-GT	XXL	3,6 kg

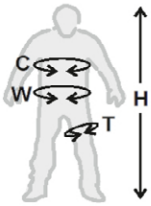

	S	M-XL	XXL
H	155 cm - 170 cm	164 cm - 180 cm	180 cm - 195 cm
W	75 cm - 110 cm	85 cm - 120 cm	90 cm - 140 cm
C	70 cm - 90 cm	85 cm - 100 cm	100 cm - 130 cm
T	40 cm - 60 cm	50 cm - 75 cm	60 cm - 85 cm

FINCH+SHELTER

FUNCTION AND USE

Personal Protective Equipment against fall from a height.
Work positioning lanyard. Equipped with an adjuster hand that bears a control lever and allows for the smooth movement of the rope, without sudden jerks, immediately locking in the position as soon as it is released. It allows for easy recovery and release of the rope, even under tension.

FEATURES

Work positioning lanyard in polyamide rope diameter 11mm (3/7") integrating a sewn end with light alloy connector locking by safety catch and opening gate 21mm (5/6"), on the other end a stop termination.
With light alloy adjuster integrating a handle and a connector with manual locking gate device by screw opening 21mm (5/6").

Catalog No.	Total length (m)	Total length (.ft and .in)	Approx. weight (kg)	Approx. weight (lbs)
FINCH+SHELTER-200	2	6 ft 6 in	0,7	1,5
FINCH+SHELTER-300	3	9 ft 10 in	0,8	0,8
FINCH+SHELTER-400	4	13 ft 1 in	0,9	0,9
FINCH+SHELTER-500	5	16 ft 4 in	1	1

RESCUEWHEEL-50

FUNCTION AND USE

Equipment for rescuing and evacuating a suspended, harnessed victim when working at height. Self-regulating descender with handwheel for victim recovery.

FEATURES

The descender, with its handwheel, makes it easy to pull the victim up, without much effort, to free him or her from the fall arrest system.
The descent speed is self-regulating at 0.7 m/s (2.3 ft/s) and can be slowed or stopped by simply holding the free rope. Passing the rope through one of the two upper hook guides gives better control of speed throughout the descent and in both directions.
The rope is held securely in the stop position by the cleat.
Both ends of the rope are manufactured with double safety latch connectors for quick attachment and back-and-forth use. Supplied with an anchoring ring for creating a temporary anchoring point around a structure.

Catalog No.	Description
RESCUEWHEEL-50	Self-regulating kit 50m / 164 ft. (*Other Lengths on request)
Contains the following :	
P3405HA-50	Descender with 50m / 164 ft. rope and three connectors
ANS2120	Anchorage ring 1,2M / 3'11"
TS45	Red carrying bag

SEMI-STATIC WORKING ROPE 10,5MM / (2/5'')

FUNCTION AND USE

Semi-static working rope for use in personal protective equipment against fall from an height and safety equipment.

FEATURES

Polyamide rope diameter 10,5mm (2/5") with breaking strength 3000daN / 6613 lbs.
Weight per meter 65g (0.428 lbs / ft).
With a sewn manufactured termination, protected by a thermoretractable tube and a plastic thimble.
A termination with stop knot protected by a thermoretractable tube.

Catalog No.	Total length (m)	Total length (.ft and .in)	Approx. weight (kg)	Approx. weight (lbs)
CORSTA105-10	10	32 ft 9 in	0,7	1,5
CORSTA105-20	20	65 ft 7 in	1,3	2,9
CORSTA105-30	30	98 ft 5 in	2,0	4,4

BACKUP

FUNCTION AND USE

Personal Protective Equipment against fall from a height. Guided type fall arrester device for vertical movement to use on a flexible anchorage line rope 10,5/11mm (5/6" – 3/7").

FEATURES

Light, opening fall arrester with safety double locking system karabiner. Integrating a push-button to stop the fall arrester to a position on the rope for having free hands movement.
Opening guided type fall arrester in stainless steel, to use in combination with semi-static rope diameter 10,5mm / 5/6" (CORSTA105). With steel snap hook by automatic locking gate device by swivel ring and opening gate 22mm (0,87").

Catalog No.	Approx. weight (kg)	Approx. weight (lbs)
BACKUP	0,4	0,9

ANS2120

FUNCTION AND USE

Personal Protective Equipment against fall from a height. Transportable temporary anchorage device. This equipment creates an individual anchorage around a structure.

FEATURES

Thick strong webbing > 22kN (24 Imperial Tons).
Anchorage ring in polyester webbing,
Width 22mm / 0,87"
Thickness 2,7mm / 0,11"
Length 1,2m / 3 ft. 11 in..

Catalog No.	Total length (m)	Total length (.ft and .in)	Approx. weight (kg)	Approx. weight (lbs)
ANS2120	1,2	3 ft 11 in	0,2	0,3

STHC-15

FUNCTION AND USE
Ideal for carrying small equipment and tools for working at height.

FEATURES
Bag including reinforcement elements allowing an easy access to the tools and ensuring a good ground clearance. High strength attachment rope and metallic ring on the top. Made in reinforced PVC-coated fabric equipped with

INSIDE:
- A main compartment including lateral reinforcement element with tool positioning sheaths for individual storage;
- Reinforced bottom with hole and eyelet for water draining.

EXTERNAL:
- Upper part reinforced by metallic ring;
- High strength rope with sewn attachment end.

Catalog No.	Overall Dimensions H* Ø (cm)	Overall Dimensions H* Ø (in)	Approx. weight (kg)	Approx. weight (lbs)
STHC-15	32*28 (volume ~17L)	12,5*11 (volume ~4,5gal)	1,2	2,6

S20TGMR

FUNCTION AND USE
Ideal for carrying small equipment and tools for working at height.

FEATURES
Bag including lateral reinforcement elements allowing an easy access to the tools. Closing flap and opening front pocket. 2 carrying devices for belt or harness wearing by metallic hooks. Made in reinforced PVC-coated polyester canvas equipped with.

INSIDE:
- A main compartment (useful dimensions : 220 x 110 x 305 mm / 8.66 x 4.33 x 12 in) including lateral reinforcement elements, bottom with 2 holes for water draining. Closing flap on upper part with self-gripping elements and strap pull;

EXTERNAL:
- A front opening pocket (useful dimensions : 225 x 30 x 260 mm / 8.86 x 1.2 x 10.24 in);
- Two metallic hooks on the back part to fix to the harness.

Catalog No.	Overall Dimensions (L x W x H) (mm)	Overall Dimensions (L x W x H) (in)	Approx. weight (kg)	Approx. weight (lbs)
S20TGMR	240 x 160 x 310	9.45 x 6.3 x 12.2	0,5	1,2

C2

FUNCTION AND USE
Personnal protective equipment against fall from a height.

FEATURES
Lightweight twist locking and asymmetrical connector practical for easily connecting multiple items. Standard connector in aluminium, asymmetrical shaped, opening 24mm (1”), automatic ¼ twist locking gate device.
Static strength > 20KN (19,6 Imperial Tons).

Catalog No.	Dimensions (mm)	Dimensions (in)	Approx. weight (kg)	Approx. weight (lbs)
C2	113 x 73	4,45 x 2,9	0,08	0,18

C7

FUNCTION AND USE
Personnal protective equipment against fall from a height.

FEATURES
Lightweight asymmetrical connector.
It has a pear shape that is practical for easily connecting multiple items.
Standard connector in aluminium, asymmetrical shaped, big opening 27mm / 1”.
Static strength > 20KN (19,6 imperial Tons).

Catalog No.	Dimensions (mm)	Dimensions (in)	Approx. weight (kg)	Approx. weight (lbs)
C7	119 x 75	4,7 x 2,95	0,1	0,21

ABS160Y

FUNCTION AND USE

Personal Protective Equipment against fall from a height.
Energy absorber to connect between the harness and the anchorage device for dissipating the energy due to a fall from a height. Double elastic lanyards integrating automatic connectors with big opening gate. Can be used in fall factor when working on vertical or horizontal support.

FEATURES

Energy absorber in wrench polyamide webbing, width 32mm (1,26”), with manual screw connector opening 18mm.
Double elastic lanyard, gathered webbing width 30mm (1,18”), integrating on each end an aluminum connector with automatic locking gate device by double safety catch and opening 60mm (2 1/3”).

Catalog No.	Total length (m)	Total length (.ft and .in)	Approx. weight (kg)	Approx. weight (lbs)
ABS160Y130	1,3	4 ft 3 in	1,5	3,3
ABS160Y180	1,8	5 ft 10 in	1,6	3,5

ABD1

FUNCTION AND USE

Personal Protective Equipment against fall from a height.
Energy absorber to connect between the harness and the anchorage device for dissipating the energy due to a fall from a heigth.

FEATURES

Light weight, can be used in fall factor during work.
Energy absorber in wrench polyamide webbing, width 32mm (1,26”), integrating a single lanyard in polyester kernmantle rope diameter 10,5mm (2/5”). On each end, a connector with manual locking gate device by screw and opening gate 18mm (0,71”).

Catalog No.	Total length (m)	Total length (.ft and .in)	Approx. weight (kg)	Approx. weight (lbs)
ABD118150	1,5	4 ft 11 in	0,6	1,4
ABD118200	2,0	6 ft 6 in	0,7	1,5

PPE TROLLEY BAG

FUNCTION AND USE

This semi-rigid, high-strength canvas bag can be used to carry PPE such as shoes, helmets, gloves, clothing, goggles, other equipment and documents, protected from moisture and UV light.

FEATURES

- Front: one large full-length pocket with zip;
- Back: two pockets (39 x 23 cm), with zip;
- Right side: sock pocket with name tag, zipper, for shoe or laundry;
- Top: large opening with large mesh nylon zip and two sliders, incorporating two tightening straps;
- 2 inside grid pockets;
- Removable interior divider with self grip fasteners.

Catalog No.	**STT-100**

NOTES

WORKER POSITIONNING

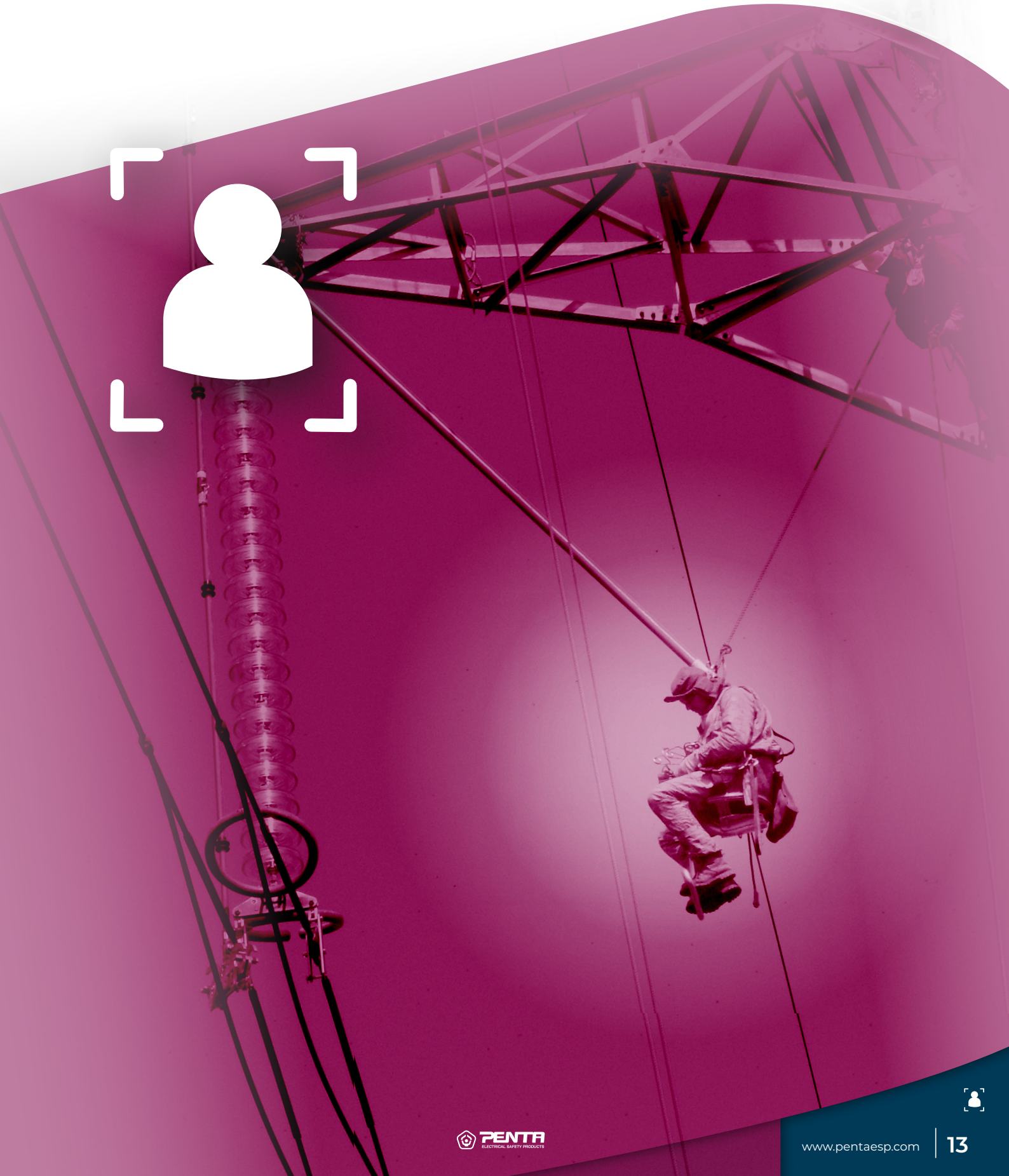

OPERATOR POSITIONING

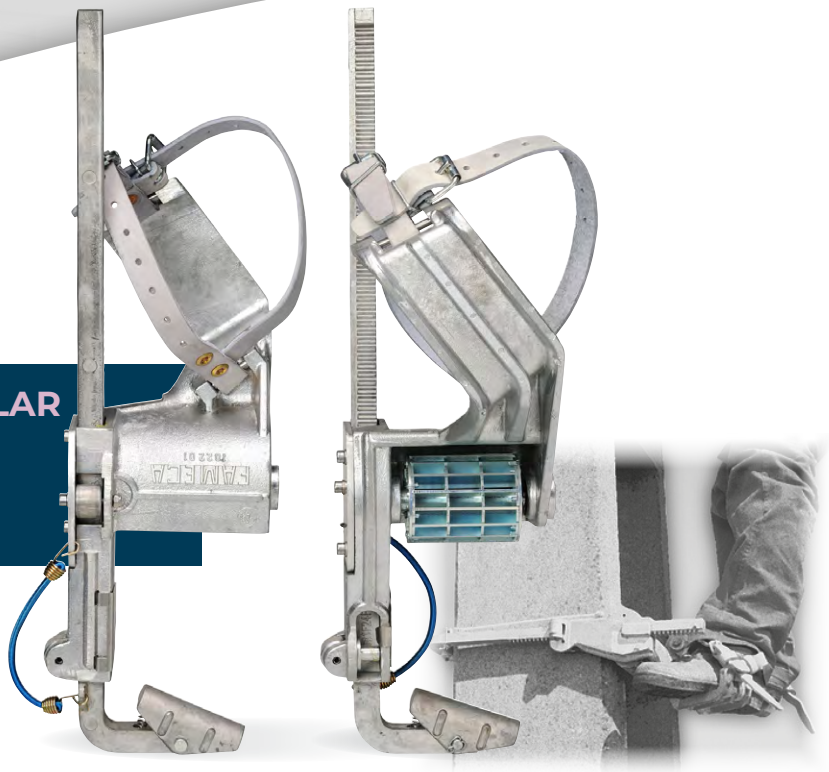

CLIMBERS FOR RECTANGULAR CONCRETE POLES

FUNCTION AND USE
Climbers for concrete poles.
Application of overhead power line networks.

FEATURES
Self tightening light alloy climber.
Load without deformation: 500daN (1102 lbs) per Climbers.
Blade rollers made of special treated steel.
Top quality leather straps.

Catalog No.	Post size (mm)	Pole size (inch)	Dimensions (mm)	Dimensions (inch)	Approx. weight (kg)	Approx. Weight (lbs)
D2001	120 to 450	4 5/7 to 1 1/2	570 x 200 x 180	22.5 x 8 x 7	7,4	16,3
D2001L	120 to 520	4 5/7 to 1 5/7	635 x 200 x 180	25 x 8 x 7	7,70	17,0

Replacement parts	Designation
KSD2001	Straps set for climbers D2001 (straps + rubber bands + pins)
KED2001	Set of 1 pair of rubber bands for climbers D2001

CLIMBERS FOR WOODEN POLES

FUNCTION AND USE
Wooden pole climbers.
Climbers specially designed for utilities and power companies.

FEATURES
Forged and hardened spikes.
Forged special steel. Points are set in the mass.
Hand-sewn and riveted leather straps.
Leather straps with a direct connection to the shaft.
Straps buckle are chrome plated and Forged from special steel.
Straps are removable.

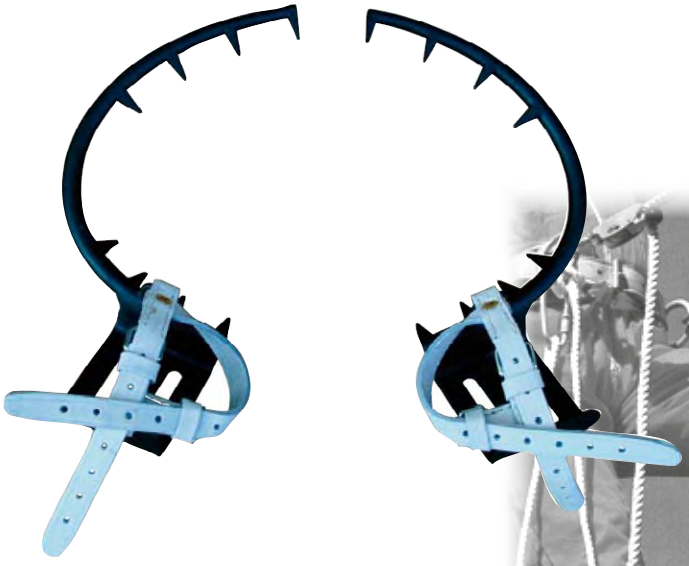

Catalog No.	Opening (mm)	Opening (in)	Number of spikes	Dimensions (mm)	Dimensions (inch)	Approx. weight (kg)	Approx. Weight (lbs)
G20 24	240	9 1/2	7	385 x 195 x 95	15 x 8 x 4	2,6	6
G20 26	260	10	8	420 x 220 x 100	16.5 x 9 x 4	2,9	6
G20 32	320	12 1/2	8	490 x 250 x 100	19 x 10 x 4	3,6	8
G20 35	320	12 1/2	8	515 x 230 x 240	20 x 1 x 9.5	3,6	8

LADDER WITH INTERLOCKING ELEMENTS

FUNCTION AND USE

Climbing function :

The interlocking ladder is used for climbing differents types of poles and towers (wooden, concrete or metal) and positioning an operator at their workstation.

Each element is attached to the support by means of the fastening systems. The fibreglass element protects the operator from the consequences of a possible rise in the potential of the support and the metal elements of the ladder.

Fixing the ladders to the support:

The ladder elements are positioned on the support using brakets and are secured to it using a fastening systems that secures them to the support.

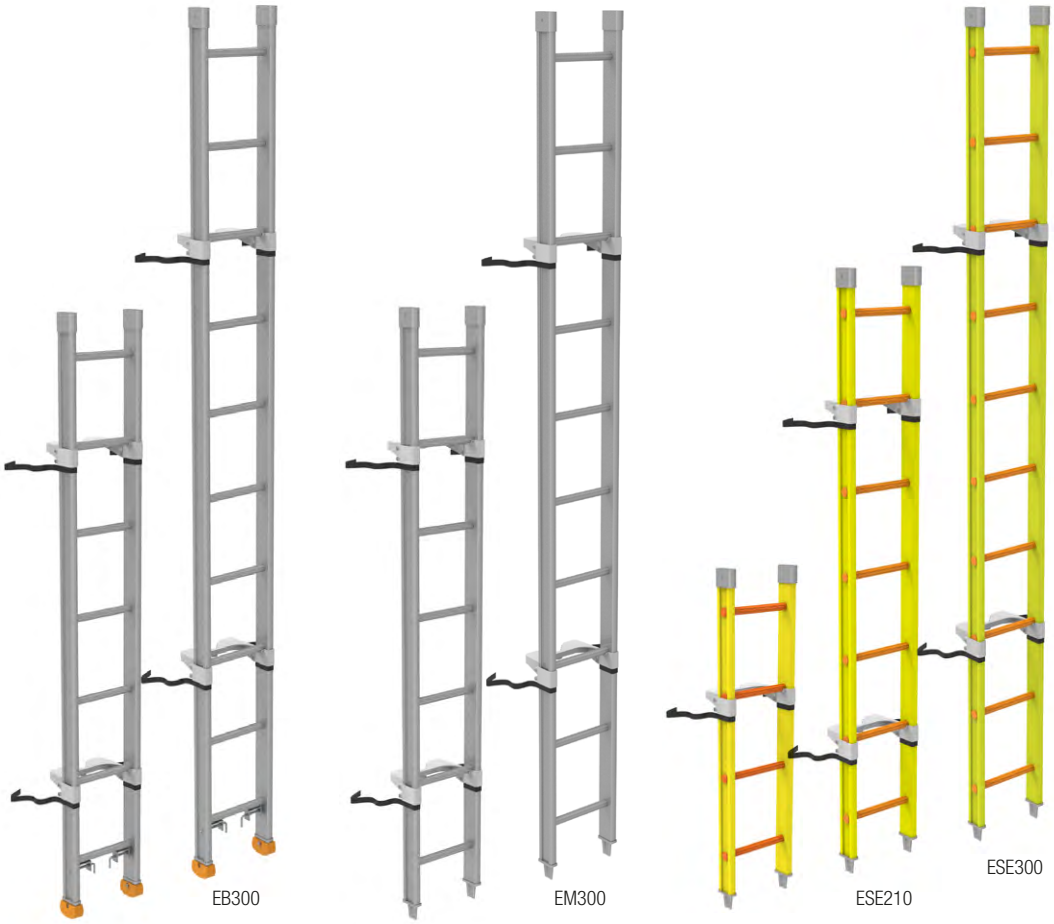

FEATURES

IEC 61478 standard

The ladder consists of the following interlocking elements:

- metal base elements with adjustable feet and removable synthetic brakets
- metal intermediate elements with removable synthetic brakets
- fibreglass-reinforced synthetic elements with removable synthetic brakets.

The fastening system consists of synthetic textile straps with buckles and a ratchet tensioner.

Catalog No.	Length (m)	Length (.ft and .in)	Number of rungs	Approx. weight (kg)	Approx. Weight (lbs)
Primary elements					
EB210	2,10	6 ft. 10 in.	7	8,2	18,1
EB300	3	9 ft. 10 in.	10	10	22,0
Metal secondary elements					
EM210	2,10	6 ft. 10 in.	7	6	13,2
EM300	3	9 ft. 10 in.	10	8	17,6
Insulated secondary elements					
ESE120	1,20	3 ft. 11 in.	4	4,7	10,4
ESE210	2,10	6 ft. 10 in.	7	7,4	16,3
ESE300	3	9 ft. 10 in.	10	9,5	20,9
Accessories					
	Designation			Approx. weight (kg)	Approx. Weight (lbs)
K37218188	Braket set			0,4	0,9
K37238373*	Strap set			0,4	0,9

* This kit consists of a 300 mm (12”) short strap and a 1200 mm (47”) long strap with tensioner

Removable braket

	Position of the removable brakets «below the ...»	
Fiberglass elements	Braket 1	Braket 2
1,20 m / 3’ 11”	3rd Rung	-
2,10 m / 6’ 10”	2nd Rung	6th Rung
3 m / 9’ 10”	3rd Rung	8th Rung

Note: The removable braket can be moved between the rung shown and the rung immediately below. The order of the rungs is determined from the bottom of the element. The straps should be fitted at the same level as the brakets.

POLE ATTACHEMENT DEVICE FOR LADDERS WITH INTERLOCKING ELEMENTS

FUNCTION AND USE

This device is used to position ladders with interlocking elements where the installation of conventional bases are difficult or impossible to use.
The ladder attachement device can also be used as a working platform.

FEATURES

Metal platform. Synthetic textile straps.
Dimensions :
Length: 0.40 m (15 ½")
Width: 0.40 m (15 ½")
Height: 0.53 m (21")
Approximate weight: 8.2 kg (18 lbs)

Catalog No.	LW02-04

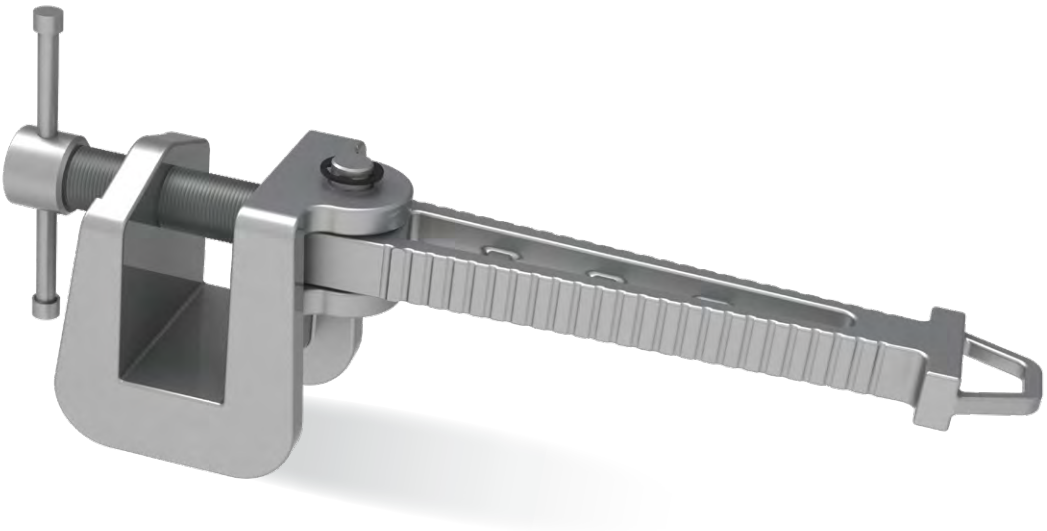

FOOTREST

FUNCTION AND USE

The footrest, should be attached to the corner of the upright section of a pylon, this will allow the operators feet to remain in a flat postion,
They are designed to give a more comfortable working position.

FEATURES

Body, vice and screws made of corrosion protected metal.
Dimensions (L x W x H): 145 x 9 x 55mm / 2" x ⅓" x 2"
Approximate weight: 1.5 kg (3,3 lbs)
Maximum working load: 125 daN (275 lbs)

Catalog No.	LW02-05

ACCESSORIES
(HANGER FOR HORIZONTAL POSITION) :
- Asymmetrical ladder support.
- Insulated tubes Ø 32mm (1 ¼")
- Sleeves and latch fork made of corrosion protected metal.
- Approximate height between conductor and ladder: 1.20 m (3' 10")
- Approximate weight: 5 kg (11 lbs)

Catalog No.	**LW02-06-EPH**

HOOK LADDER, EXTENSION AND ACCESSORIES

FUNCTION AND USE

In a vertical (or inclined) position:
Hooked to the structure of a tower, the HANGING ROPE, EXTENSIONS AND ACCESSORIES are used by an operator to position himself at earth potential or, if necessary to a different potential (live).
The extension is assembled to the ladder legs by its sleeves and by bolts or pinned pins.
When in use, the chains must :
either be closed on the hooks or secure the ladder to the structure.

FEATURES

CEI 61478 / ASTM F711
The side rails and rungs of the hook ladders, the extensions and the tie rods of the asymmetrical ladder are made of orange-coloured insulating material.

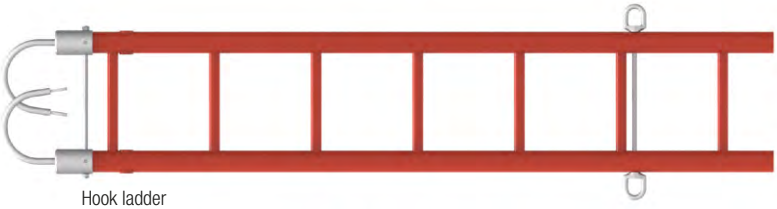

Hook ladder

Extension - Model 1

Extension - Model 2

Catalog No.	Total length (m)	Total length (.ft and .in)	Insulated lenght (m)	Insulated lenght (m)	Number of rungs	siderails Ø (mm)	siderails Ø (inch)	Approx. weight (kg)	Approx. weight (lbs)
Hook ladder									
LW02-06-240	2,4	7 ft. 10 in.	2,1	6 ft. 10 in.	7	64	2 ½	23	50,7
LW02-06-360	3,6	11 ft. 9 in.	3,3	10 ft. 9 in.	11			30	66,1
Extensions : model 1/model 2*									
LW02-06-RAL1-160	1,6	5 ft. 2 in.	1,4	4 ft. 7 in.	5	64	2 ½	10	22,0
LW02-06-RAL2-160									
LW02-06-RAL1-250	2,5	8 ft. 2 in.	2,3	7 ft. 6 in.	8			16	35,3
LW02-06-RAL2-250									
LW02-06-RAL1-370	3,7	12 ft. 1 in.	3,5	11 ft. 5 in.	12			24	52,9
LW02-06-RAL2-370									

* Model 2 has an additional metal rod.

OPERATOR POSITIONING

HOIST LADDER

FUNCTION AND USE

The 3 or 5 strand rigged hoist ladder allows an operator to be hoisted, onto the conductors.
It allows an operator to move along the conductor over short distances (a few meters or feet).
The hoist ladder can be fitted to a single conductor, or to a bundle of conductors.
A wedge is used to lock the lower muffle joint, to a rigid ladder.

FEATURES

Maximum load of the hoist ladder assembly: 120 daN (265 lbs)
This assembly is composed of :
• Hanging system, comprising :
Two lockable swivel forks, two rollers with brake, a rigid ladder attachment pin, and an anchor point for attaching the insulated rope.
The orientation of the two forks allows the unit to be positioned on an overhead network :
- On a single conductor,
- On a bundle of conductors (400 mm / 1'3" or 600 mm / 2' apart).
Maximum conductor cross-section: 1600 mm^2 (3157 KCMIL)
Approximate weight: 7 kg (15,4lbs)
- Rigid metal ladder with an overall length of 2.22 m (7'3").
Approximate weight of the ladder: 7.5 kg (16,53lbs)
• Hoist with 5 strands or 3 strands, rigged with insulating rope equipped with locking pins.
Mass of the unrigged hoist: 6 kg / (13,23 lbs)
• Hook spacer with pulley for installation on bundled conductors; 400 mm (1'3") or 600 mm (2') model,
• Hook with pulley, for single conductor,
• Insulating wire

Catalog No.	
LW02-07-EP	Hoist Ladder
LW02-07	Complete kit

ACCESSORIES

Catalog No.	Accessories
LW02-07-CRO	Hook
LW02-07-ENT	Hook spacer
LW02-07-ISO	Insulated rope
LW02-07-PAL	Hoist
LW02-07-SYS	Hooking system

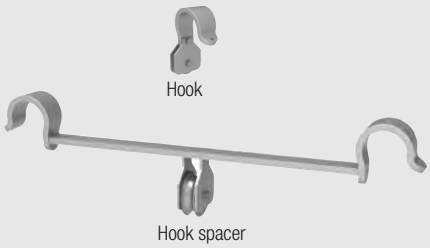

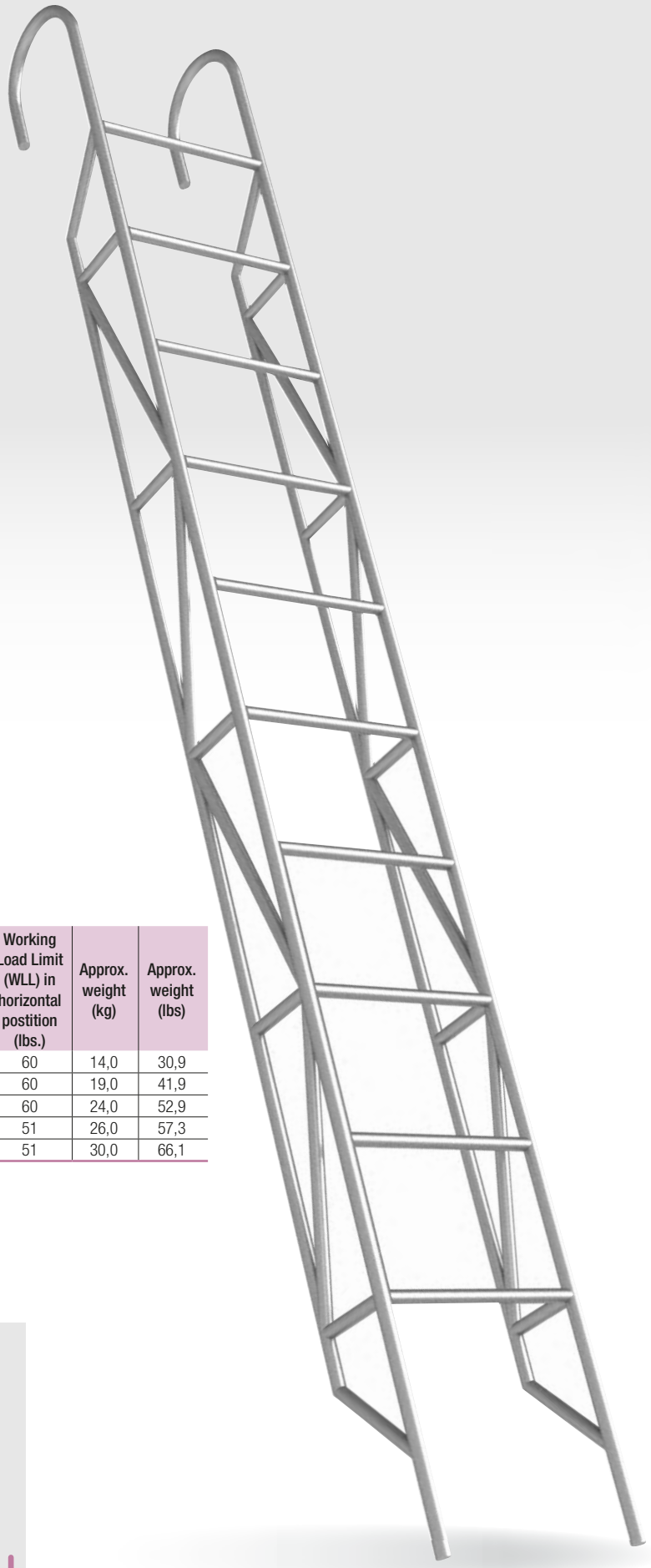

HOOK LADDER

FEATURES

Aluminium alloy ladder

Catalog No.	Length (m)	Length (.ft and .in)	Working Load Limit (WLL) in vertical postition (daN)	Working Load Limit (WLL) in vertical postition (lbs.)	Working Load Limit (WLL) in horizontal postition (daN)	Working Load Limit (WLL) in horizontal postition (lbs.)	Approx. weight (kg)	Approx. weight (lbs)
LW02-08-3	3	9 ft. 10 in.	225	51	265	60	14,0	30,9
LW02-08-4	4	13 ft. 1 in.			265	60	19,0	41,9
LW02-08-5	5	16 ft. 4 in.			265	60	24,0	52,9
LW02-08-6	6	19 ft. 8 in.			225	51	26,0	57,3
LW02-08-7	7	22 ft. 11 in.			225	51	30,0	66,1

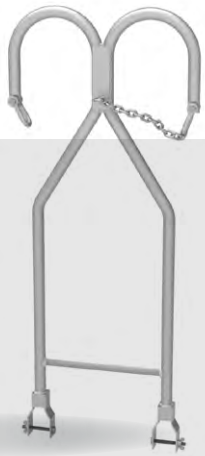

BRACKET FOR HOOK LADDER

FEATURES

Aluminium alloy ladder bracket.
CMU: 265 daN (584 lbs)

Catalog No.	**LW02-09**

OPERATOR POSITIONING

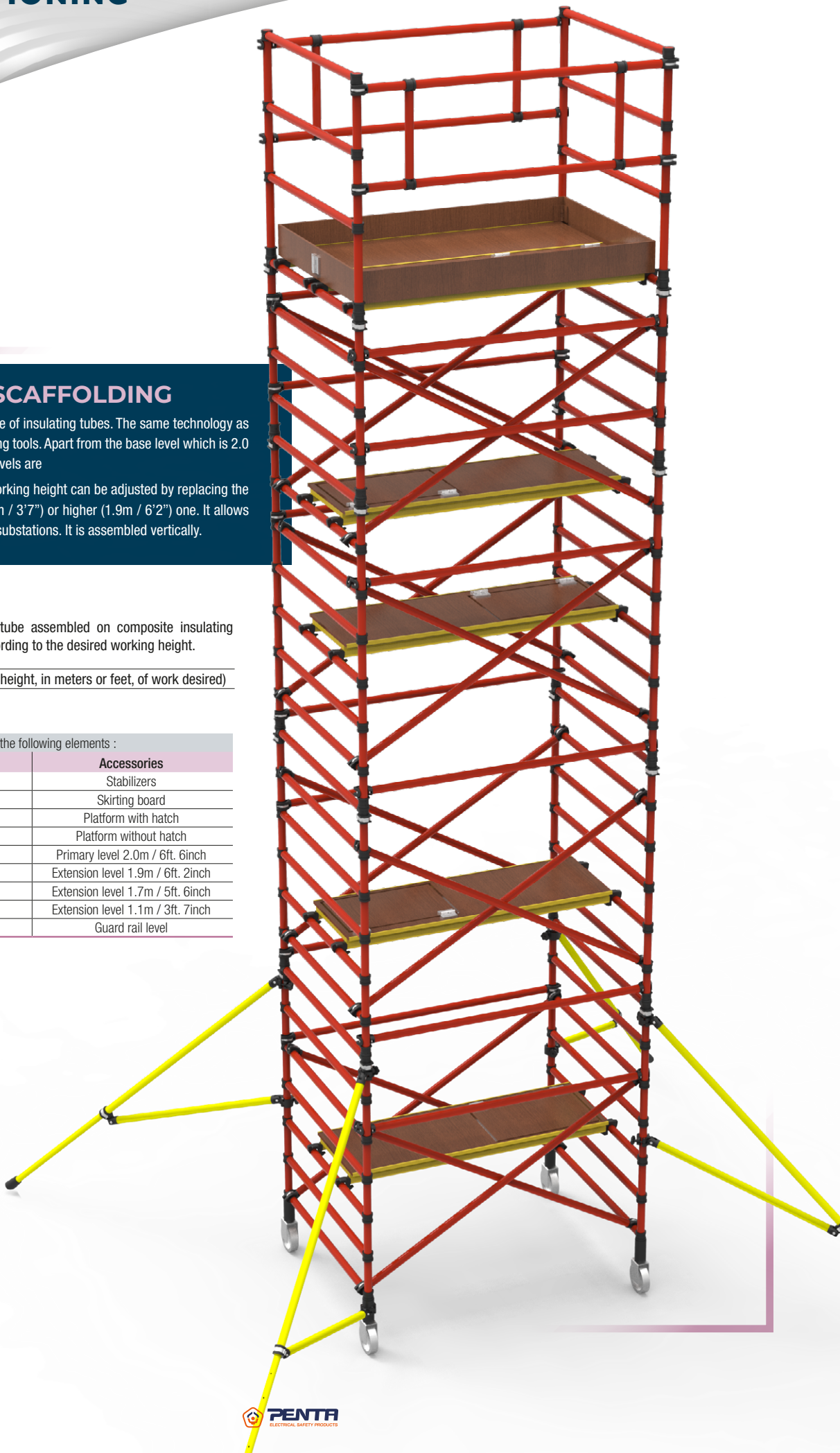

INSULATED SCAFFOLDING

The insulated scaffold is made of insulating tubes. The same technology as the tubes used for Live Working tools. Apart from the base level which is 2.0 m (6'6") high, the standard levels are

1.7m / 5'6" high. The final working height can be adjusted by replacing the last floor with a smaller (1.1m / 3'7") or higher (1.9m / 6'2") one. It allows two people to work safely in substations. It is assembled vertically.

FEATURES

Orange-coloured, insulating tube assembled on composite insulating fittings. To be composed according to the desired working height.

Catalog No.	**LW02-10-x** (X: height, in meters or feet, of work desired)

The scaffolding is composed of the following elements :

Catalog No.	Accessories
LW02-10-STAB	Stabilizers
LW02-10-WTB	Skirting board
LW02-10-WPH	Platform with hatch
LW02-10-WP	Platform without hatch
LW02-10-BF200	Primary level 2.0m / 6ft. 6inch
LW02-10-EXF190	Extension level 1.9m / 6ft. 2inch
LW02-10-EXF170	Extension level 1.7m / 5ft. 6inch
LW02-10-EXF110	Extension level 1.1m / 3ft. 7inch
LW02-10-GF110	Guard rail level

SUSPENSION POLE

FUNCTION AND USE

The suspension pole is used either with :

• A seating device associated with the suspension pole bracket

• The hook ladder extensions and accessories together with the angled brace.

It allows the movement of an operator and the positioning at his workstation.

The choice of the length of suspension poles and ladder extensions depends on the voltage of the network, the length of the insulator chain and its accessories and the dimensions of the tower.

FEATURES

The suspension pole is made of insulated synthetic material. It has an aluminium end cap to fit the pole clamp or the angled spacer.

Catalog No.	Total length L (m)	Length (.ft and .in)	Insulated length (m)	Insulated length (.ft and .in)	Tube Ø (mm)	Tube Ø (inch)	Approx. weight (kg)	Approx. weight (lbs)
LW02-11-64-122	1,22	4 ft. 0 in.	1	3 ft. 3 in.	64	2 1/2	3,5	7,7
LW02-11-64-152	1,52	4 ft. 11 in.	1,3	4 ft. 3 in.			4	8,8
LW02-11-64-182	1,82	5 ft. 11 in.	1,6	5 ft. 2 in.			4,5	9,9
LW02-11-64-212	2,12	6 ft. 11 in.	1,9	6 ft. 2 in.			5	11,0
LW02-11-64-242	2,42	7 ft. 11 in.	2,2	7 ft. 2 in.			5,5	12,1
LW02-11-64-272	2,72	8 ft. 11 in.	2,5	8 ft. 2 in.			6	13,2
LW02-11-64-302	3,02	9 ft. 10 in.	2,8	9 ft. 2 in.			6,5	14,3
LW02-11-64-332	3,32	10 ft. 10 in.	3,1	10 ft. 2 in.			7	15,4
LW02-11-64-362	3,62	11 ft. 10 in.	3,4	11 ft. 1 in.			7,5	16,5
LW02-11-64-422	4,22	13 ft. 10 in.	4	13 ft. 1 in.			8,5	18,7

Stirrup - Model 1

Stirrup - Model 2

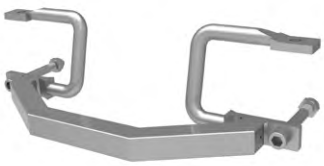

Angled spacer

ACCESSORIES

Catalog No.	Accessories	Length maximum (mm)	Length (.in)	Approx. weight (kg)	Approx. weight (lbs)
LW02-11-ETR1	Stirrup for suspension pole Model 1	200	8	1,3	2,9
LW02-11-ETR2	Stirrup for suspension pole Model 2	350	13 3/4	3,5	7,7
LW02-11-ENT	Angled spacer	-	-	3,5	7,7

POSITIONNEMENT DE L'OPÉRATEUR

INSULATING BEAM

FUNCTION AND USE

The beam is used to move an operator and position him at his workstation. Once on the beam, the operator must secure himself to the beam, to the exclusion of any other securing point.
Hoists, ropes and ties used with the beam must be used exclusively for this purpose (sold separately).

Catalog No.	**LW02-12**	Complete insulating beam: contains all the elements in the table below

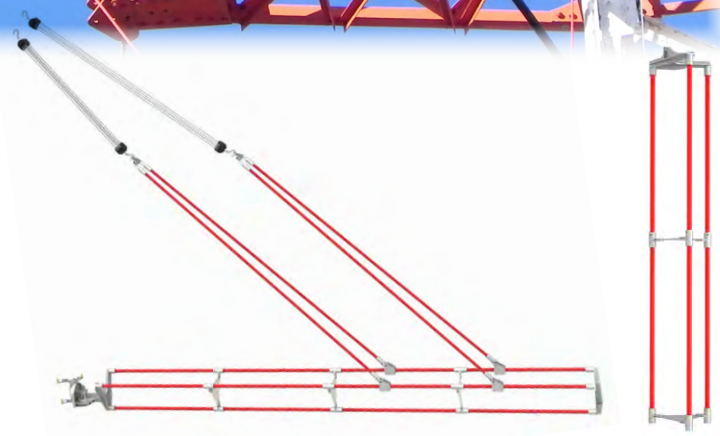

Catalog No.	Total length (m)	Total length (.ft and .in)	Insulated length (m)	Insulated length (.ft and .in)	Tube Ø (mm)	Tube Ø (inch)	Approx. weight (kg)	Approx. weight (lbs)
Primary element								
LW02-12-EB	3	9 ft. 10 in.	2,8	9 ft. 2 in.	39	1 1/2	17,0	37,5
Intermediate element								
LW02-12-EI	1,5	4 ft. 11 in.	1,4	4 ft. 7 in.	39	1 1/2	7,0	15,4
Terminal element								
LW02-12-ET-150	1,5	4 ft. 11 in.	1,4	4 ft. 7 in.	39	1 1/2	7,8	17,2
LW02-12-ET-225	2,25	7 ft. 4 in.	2	6 ft. 6 in.			12,7	28,0
Swivel ring puller								
LW02-12-TIR-300	3	9 ft. 10 in.	2,8	9 ft. 2 in.	32	1 1/4	2,7	6,0
LW02-12-TIR-360	3,6	11 ft. 9 in.	3,4	11 ft. 1 in.			3,0	6,6

ACCESSORIES

Accessories	
Catalog No.	Accessories
LW02-12-SA	Adjustable seat
LW02-12-MDT	Double clevis clamp for Ø64mm (2") and Ø39mm (1") tube
LW02-12-MCT	Clevis clamp for Ø39mm (1") tube
LW02-12-TIR	Coupling triangles for tubes
LW02-12-PAL	Coupling triangles for hoist
LW02-12-TM	Holding triangle

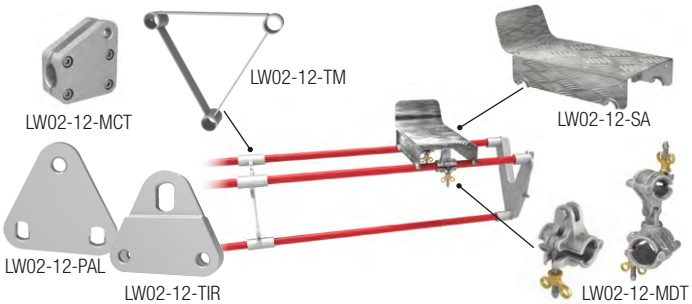

PIVOTING ATTACHEMENT FOR BEAM

FUNCTION AND USE

Attached to the structure of a pylon, the attachement is used in conjunction with the insulated beam.
This allows it to be articulated in a vertical position and rotated to a horizontal position.
When the attachement is placed on angles larger than 100 mm (3.9”), the fixing rods must be equipped with hooks and washers (see Catalog No. LW07-06 page 77).

FEATURES

These materials are made of metal protected against corrosion.
Dimensions of the angles bars that can receive the saddle: 80 to 150 mm / 3” to 6”
Approximate weight of the attachement for angles bars with inner flange: 22 kg (48,5 lbs)
Approximate weight of the attachement for outer flange angles bars: 30 kg (66,14 lbs)
WLL: 1,000 daN (2204 lbs) in line with the installed clamp.

To be composed with the following elements

Example of use

ELEMENTS

Catalog No.	Accessories
LW02-13-CRAP	screw-in clamp
LW02-13-SCAI	Saddle for angle brackets with inner wing
LW02-13-SCAE	Saddle for angle brackets with exterior wing
LW02-13-CONS	Swivel bracket with two support surfaces, one of which has a 7% slope
LW02-13-PLAT	Pivoting attachement with hinge pin

LW02-13-SCAE

LW02-13-SCAI

LW02-13-CRAP

LW02-13-CONS

LW02-13-PLAT

PIVOTING ATTACHEMENT FOR TOWER TYPE SADDLE

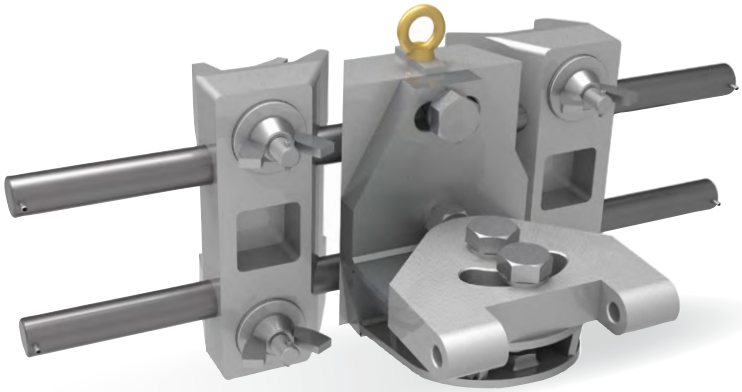

FUNCTION AND USE

The saddle for twin and cross angle pylons is used to receive the beam and allow its articulation from a vertical position to a horizontal position. The swivel head (of a saddle with a sleeve for example) can also be fitted on the plate of the tower saddle to receive a sleeve with a diameter of 64 mm (2.5”), for example.

FEATURES

Base, clamping jaws, rails, tray, are made of corrosion protected metal.
Swivel console made of corrosion-protected metal with a tray support with two bearing surfaces, one of which is sloped at 7%.

Catalog No.	**LW02-14**

Dimensions of the angles bars that can receive the saddle: 100 mm to 200 mm / 4” to 7 7/8”
Maximum working load: 400 daN (881 lbs)
Dimensions: 550 x 300 x 200 mm /1’2” x 11 4/5” x 7 7/8”
Approximate weight: 19 kg (41,9 lbs)

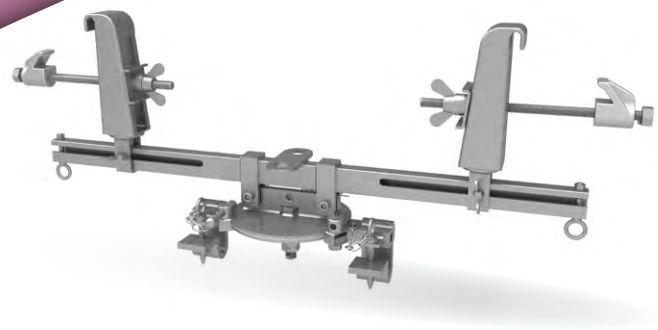

C-SADDLE SUSPENSION

FUNCTION AND USE

The C-saddle suspension is only used on angle iron frames.
Attached to the tower structure, it allows the attachement of devices, such as the seat access device or the extension ladder, for example. Type 2 C-saddles can be used on the tapered ends of tower arms. When the saddle is to be placed on angle bars larger than 100 mm (3.9”), the fixing rods must be equipped with hooks and washers (see Catalog No. LW07-06 page 77).

FEATURES

This device consists of two C-shaped saddles combined with a slide rail. The slide rail is equipped with: a three-nut stirrup 20 -70-150 with a 20 mm (4/5”).

Catalog No.	**LW02-15**

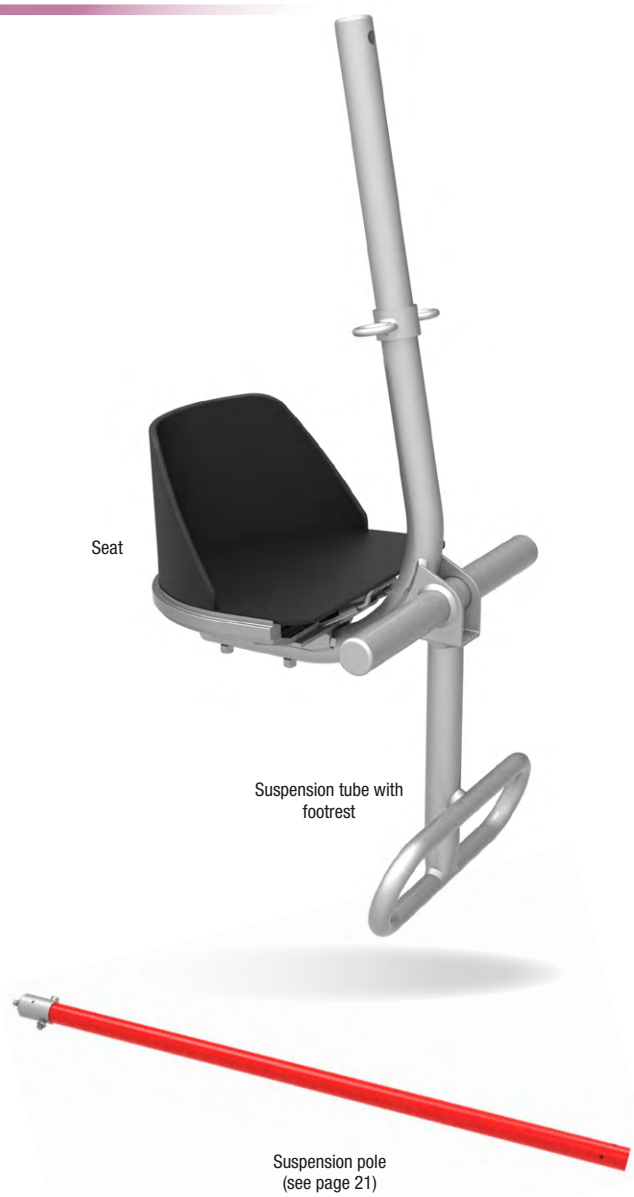

BOSUN’S CHAIR

FUNCTION AND USE

The bosun’s chair is used to move an operator and position him at his workstation.
The choice of the length of the suspension pole depends on the voltage of the network, the length of the chain and its accessories, and the dimensions of the tower.
NOTE: Once seated, the operator must secure themselves via a lanyard shackle to the insulated rope. No other anchoring point may be used

FEATURES

Rubber seat with steel frame protected against corrosion:
• width: 0.50 m (1 2/3’) • depth: 0.40 m (1 1/3’) • height: 0.30m (1’)
Suspension tube with footrest in light alloy.
Dimensions: • length: 1.50 m (5’) • width: 0.50 m (1 2/3’)
Approximate weight of rubber seat and suspension tube assembly: 18.5 kg (40,79 lbs)
Two-pin sleeve, insulating rope shackle and two-cornered clevis pieces made of light alloy and corrosion protected steel.
Insulating suspension pole.

Catalog No.	**LW02-16**

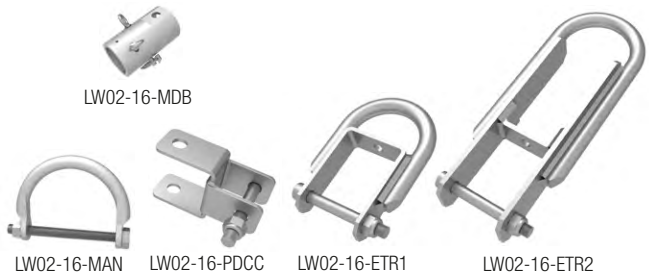

Catalog No.	Designation
LW02-16	Complete seat kit
Contient	
LW02-16-TS	Strain pole with footrest
LW02-16-S	Seat
LW02-16-MDB	Double pin clamp
LW02-16-MAN	Shackle
LW02-16-PDCC	Double clevis attachement
LW02-11-ETR1	Brackets for strain pole model 1
LW02-11-ETR2	Brackets for strain pole model 2

SCREEN

FUNCTION AND USE

When working with a screen, the screen delimits the operator's area of movement. The operator should not come in contact with the screen once the screen is in position.
The installation and stability of the screen is ensured by insulating poles equipped with skirts and screen accessories.
The screens must be kept in place for the amount of time required; as is stricly necessary to carry out the work for which they were installed.

FEATURES

Insulating tube (diameter 32 mm / 1 ¼")
Grip rods made of solid insulating rod (diameter 15 mm / 4/5"), at least one of which is removable.
White plastic mesh (10 mm / 2/5" mesh). Fixing accessories made of synthetic material.
The assembled unit (tubes, mesh) is non-fragmenting.
Dimensions: 2m x 1m / 6'6" x 3'3"
Approximate weight: 5 kg (11 lbs)

To be used in association with the following elements

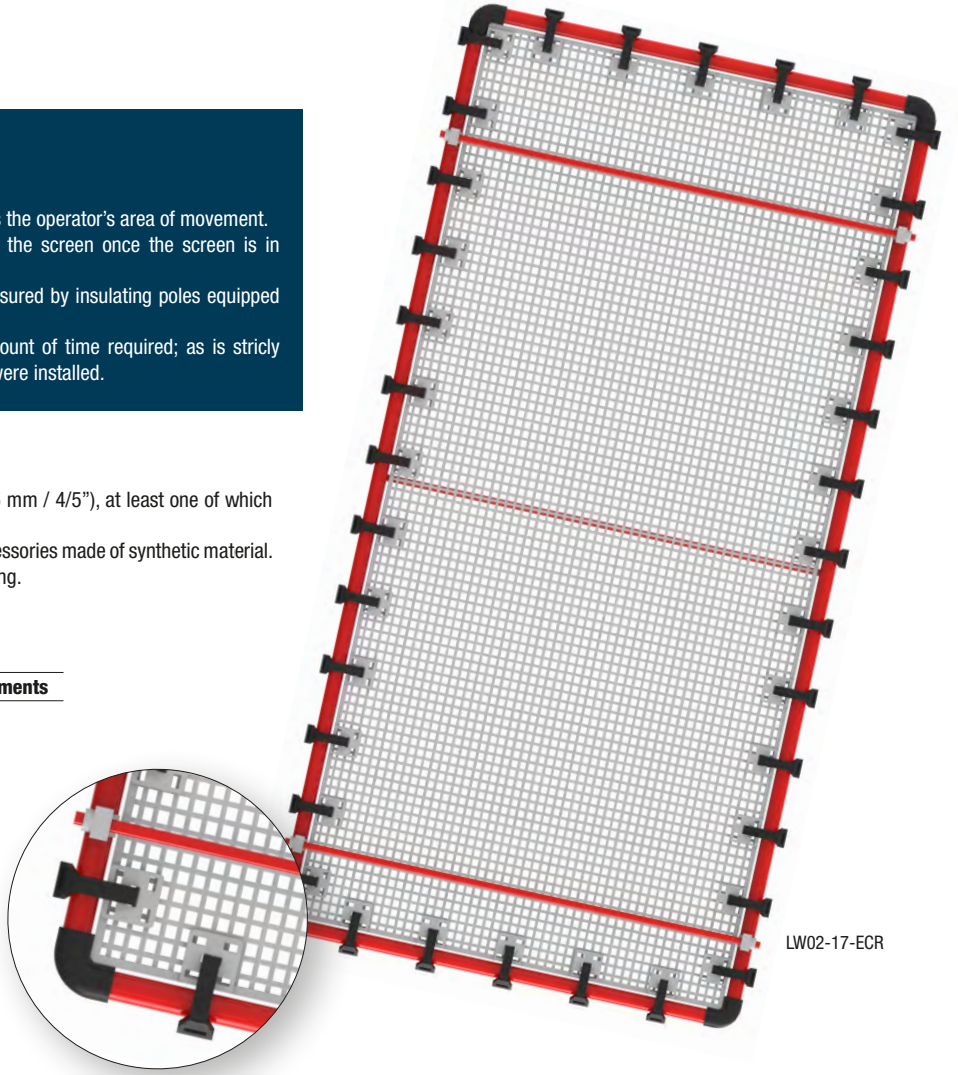

LW02-17-ECR

LW02-17-RAILM

LW02-17-RAILF

LW02-17-TP

LW02-17-EP LW02-17-EFR LW02-17-CP LW02-17-MD LW02-17-MPMT LW02-17-SJM

ACCESSORIES FOR SCREENS OR SCREEN HOLDING STRUCTURES

FUNCTION AND USE

Accessories for screens or screen holding structures are used:
- To set up and maintain the screens,
- To join together tubes and profiles in order to create a screen support structure.

FEATURES

- Screen support rail(s) (in two interlocking parts) made of synthetic material.
- Grip rod made of solid insulating rod (Ø 15 mm / 3/5") equipped with its fixing accessories.
- Vice clamp, rail clamp, grip connector, trunnion clamp, clamp with sleeves and double trunnion clamp, made of corrosion protected metal.

Catalog No.	Designation	Dimmensions (transport configuration) (mm)	Dimmensions (transport configuration) (.ft and .in)	Approx. weight (kg)	Approx. weight (lbs)
LW02-17-ECR	Screen only	2000 x 1000	6'6" x 3'3"	5	11,0
LW02-17-RAILM	Screen support rail male type	2200 x 80 x 70	6'6" x 3" x 2"	3,5	7,7
LW02-17-RAILF	Screen support rail female type	2600 x 80 x 70	6'6" x 3" x 2"	3	6,6
LW02-17-TP	Gripping rod	L = 1000	3'3"	0,5	1,1
LW02-17-EP	Vice Clamp	190 x 110 x 50	7" x 4" x 4/5"	0,5	1,1
LW02-17-EFR	Rail clamp	180 x 65 x 20	7" x 4" x 2"	0,5	1,1
LW02-17-CP	Grip connector	210 x 80 x 35	8" x 3" x 1 3/8"	0,5	1,1
LW02-17-MD	Double trunnion Clamp	135 x 135 x 55	5 1/3" x 5 1/3" x 2"	0,7	1,5
LW02-17-MPMT	Padded clamp with pole clamp	190 x 160 x 55	7" x 6" x 2"	1,5	3,3
LW02-17-SJM	Tube clamp	400 x 250 x 85	15 3/4" * 9 5/6" * 3 1/3"	4,8	10,6

NOTES

INSULATED HAND TOOLS

Accessories:
Coated suspension hook and spare parts (See page 149)

CLAMPSTICK - EXTERNAL ROD WITH OR WITHOUT UNIVERSAL ADAPTER

Function and use
The clampstick is the most universal tool used to install and remove personal protective grounding clamps, to install plastic and rubber cover-up equipment, etc.

Features
Insulating tube, fiberglass over the foam core.
Control rod is also made of insulating material.
Manufactured in accordance with ASTM F711 and IEC60855-1 standards.
Clampsticks meet ASTM F1825 standard.
High-performance plastic pole head with integrated and replaceable hook.

Catalog No.	Total length (m)	Total length (.ft and .in)	Insulated length (m)	Insulated length (.ft and .in)	Tube Ø (mm)	Tube Ø (inch)	Control rod Ø (mm)	Control rod Ø (inch)	Approx. weight (kg)	Approx. weight (lbs)
LW03-01-32-200	2	6 ft 6 in	0,70	2 ft 3 in	32	1 ¼	10	2/5	2,6	5,7
LW03-01-32-260	2,60	8 ft 6 in	1,15	3 ft 9 in					3,2	7,1
LW03-01-32-320	3,20	10 ft 5 in	1,70	5 ft 6 in					3,8	8,4
LW03-01-32-380	3,80	12 ft 5 in	2,35	7 ft 8 in					4,4	9,7

*part between the tool head and the hand positioning guard, ensuring operator insulation

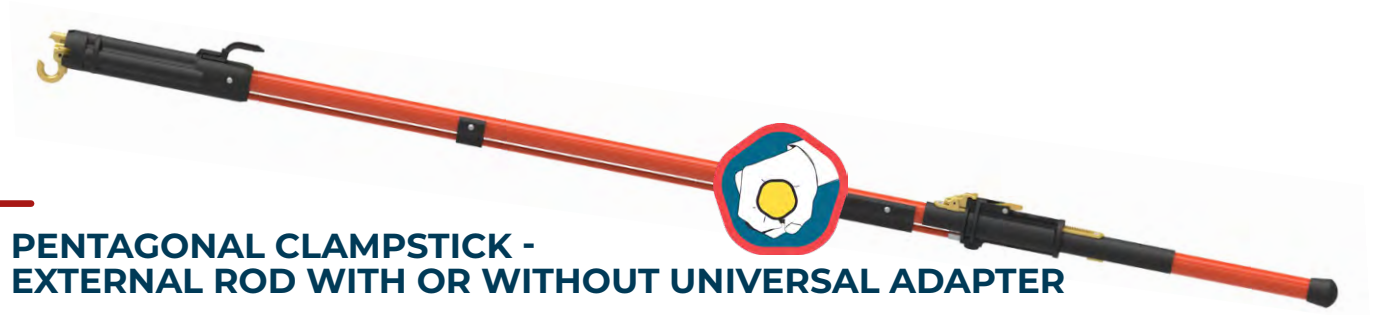

PENTAGONAL CLAMPSTICK - EXTERNAL ROD WITH OR WITHOUT UNIVERSAL ADAPTER

Function and use
Ergonomic grip thanks to its pentagonal shape which is more adapted to the natural shape of the hand.
The clampstick is the most universal tool used to install and remove personal protective grounding clamps, to install plastic and rubber cover-up equipment, etc.

Features
Pole diameter equivalent to 32mm (1 ¼”). Pentagonal insulating tube, fiberglass over the foam core. Control rod is also made of insulating material.
Manufactured in accordance with ASTM F711 and in compliance with IEC60855-1 standards.
Clampsticks meet ASTM F1825 standard.
High-performance plastic pole head with integrated and replaceable hook.

Catalog No.	Total length (m)	Total length (.ft and .in)	Insulated length (m)	Insulated length (.ft and .in)	Tube Ø (mm)	Tube Ø (inch)	Control rod Ø (mm)	Control rod Ø (inch)	Approx. weight (kg)	Approx. weight (lbs)
ASTM F1825										
LW03-02-32P-200	2	6 ft 6 in	0,70	2 ft 3 in	32	1 ¼	10	2/5	2,6	5,7
LW03-02-32P-260	2,60	8 ft 6 in	1,15	3 ft 9 in					3,2	7,1
LW03-02-32P-320	3,20	10 ft 5 in	1,70	5 ft 6 in					3,8	8,4
LW03-02-32P-380	3,80	12 ft 5 in	2,35	7 ft 8 in					4,4	9,7

*part between the tool head and the hand positioning guard, ensuring operator insulation

EXTENSION FOR CLAMPSTICK

Function and use

Attached to the head of a Clampstick 3,8m (12'5").
The Extension allows the length of a hook pole to be increased.

Features

Hollow tube made of fiberglass and reinforced plastic.
Solid fiberglass control rod.
The operating rod is internal.

Catalog No.	Total length (m)	Total length (.ft and .in)	Tube Ø (mm)	Tube Ø (inch)	Control rod Ø (mm)	Control rod Ø (inch)	Approx. weight (kg)	Approx. weight (lbs)
LW03-03-32-120	1,2	3 ft 11 in	32	1 ¼	10	2/5	2	4

HINGED CLAMPSTICK

Function and use

The Clampstick is the most universal tool used to install and remove personal protective grounding clamps, to install plastic and rubber cover-up equipment, etc. Insulating tubes, Pole diameter 32mm (1 ¼") and operating rod 10mm (2/5"). Ideal for workers with limited storage space in their vehicles.

Features : Insulating tube, fiberglass over the foam core. Control rod is also made of insulating material. Manufactured in accordance with ASTM F711. High-performance plastic pole head with integrated and replaceable hook.

Catalog No.	Total length (m)	Total length (.ft and .in)	Folded length (m)	Folded length (.ft and .in)	Insulated length (m)	Insulated length (.ft and .in)	Tube Ø (mm)	Tube Ø (inch)	Control rod Ø (mm)	Control rod Ø (inch)	Approx. weight (kg)	Approx. weight (lbs)
ASTM F1825												
LW03-04-32-605	6,05	19 ft 10 in	3,02	9 ft 10 in	4,29	14 ft 0 in	32	1 ¼	10	2/5	6,6	14,6
LW03-04-32-508	5,08	16 ft 8 in	2,56	8 ft 4 in	3,29	10 ft 9 in					5,85	12,9
LW03-04-32-450	4,5	14 ft 9 in	2,27	7 ft 5 in	2,71	8 ft 10 in					5,41	11,9
LW03-04-32-381	3,81	12 ft 6 in	1,93	6 ft 3 in	2,02	6 ft 7 in					4,88	10,8
LW03-04-32-320	3,2	10 ft 5 in	1,62	5 ft 3 in	1,41	4 ft 7 in					4,4	9,7
LW03-04-32-260	2,6	8 ft 6 in	1,32	4 ft 3 in	0,81	2 ft 7 in					3,93	8,7

SECTIONAL CLAMPSTICK

Function and use

The sectional clampstick is the most universal tool used to install and remove personal protective grounding clamps, to install plastic and rubber cover-up equipment, etc. Pole diameter 32mm (1 ¼") and operating rod 10mm (2/5").
Ideal for workers with limited storage space in their vehicles. The device is lightweight, interlocking and very robust.
The length of the pole is defined by the operating handle and ensures a good grip on the pole.

Features : Insulating tube, fiberglass over the foam core. Control rod is also made of insulating material.
Manufactured in accordance with ASTM F711 and IEC60855-1 standards. Hook and mechanism made of corrosion-resistant metal.
High-performance plastic pole head with integrated and replaceable hook.

Catalog No.	Total length (m)	Total length (.ft and .in)	Insulated length (m)	Insulated length (.ft and .in)	Tube Ø (mm)	Tube Ø (inch)	Control rod Ø (mm)	Control rod Ø (inch)	Approx. weight (kg)	Approx. weight (lbs)
ASTM F1825										
PRIMARY ELEMENTS										
LW03-05-32-HA-11	2	3 ft 7 in	0,70	0 ft 3 in	32	1 ¼	10	2/5	1,7	3,7
LW03-05-32-HA-35	3,5	11 ft 5 in	1,15	7 ft 2 in					3,3	7,3
EXTENSIONS ELEMENTS										
LW03-05-32-RA-12	1,2	3 ft 11 in	1,1	3 ft 7 in	32	1 ¼	10	2/5	1,2	2,6
LW03-05-32-RA-18	1,8	5 ft 10 in	1,7	5 ft 6 in					1,7	3,7
LW03-05-32-RA-24	2,4	7 ft 10 in	2,3	7 ft 6 in					2,1	4,6
LW03-05-32-RA-30	3	9 ft 10 in	2,9	9 ft 6 in					2,6	5,7
TOP ELEMENT										
LW03-05-32-ET-06	0,6	1 ft 11 in	0,5	1 ft 7 in	32	1 ¼	10	2/5	0,9	2,0

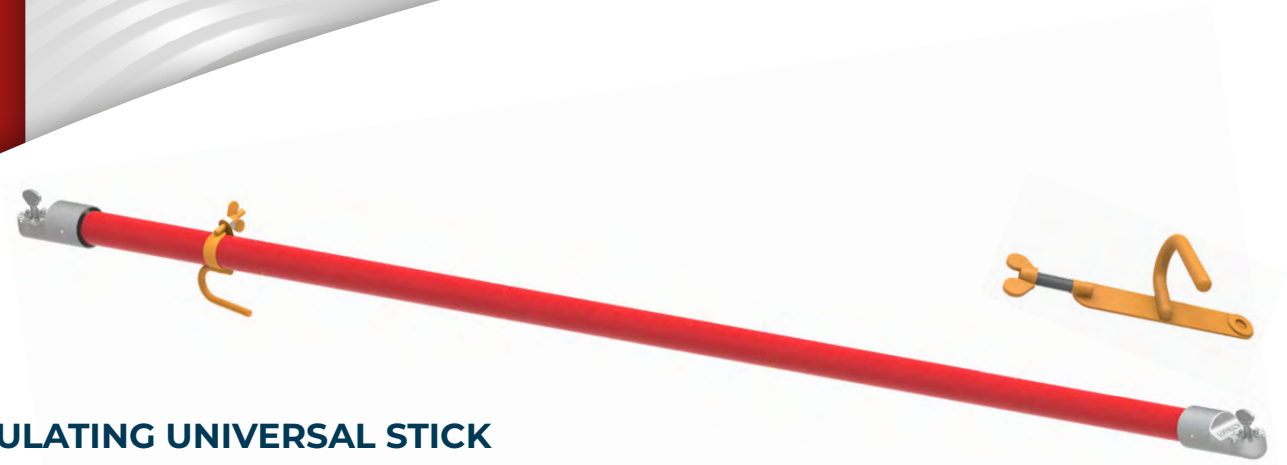

INSULATING UNIVERSAL STICK

Function and use

The insulating universal stick allows the use of tools with a universal attachment. Universal end fittings are located at each end of the stick.

Features

Insulating tube, fiberglass over the foam core. Manufactured in accordance with ASTM F711 and IEC60855-1 standards.
Universal end fittings with thumbscrews (M8 thread), made of corrosion-resistant metal.

Catalog No.	Total length (m)	Total length (.ft and .in)	Insulated length (m)	Insulated length (.ft and .in)	Tube Ø (mm)	Tube Ø (inch)	Approx. weight (kg)	Approx. weight (lbs)
LW03-06-32-180	1,8	5 ft 10 in	1,7	5 ft 6 in	32	1 ¼	1,2	2,6
LW03-06-32-255	2,55	8 ft 4 in	2,35	7 ft 8 in	32	1 ¼	1,7	3,7
LW03-06-32-315	3,15	10 ft 4 in	2,95	9 ft 8 in	32	1 ¼	2	4,4
LW03-06-39-315					39	1 ½	2,7	6,0
LW03-06-32-375	3,75	12 ft 3 in	3,55	11 ft 7 in	32	1 ¼	2,4	5,3
LW03-06-39-375					39	1 ½	3,6	7,9

* Other lengths available on request (subject to volume)

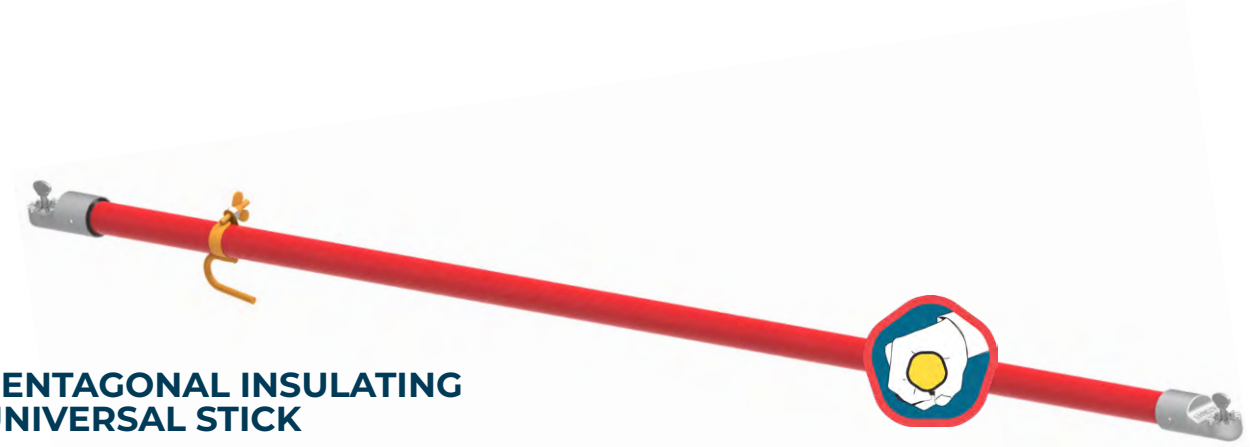

PENTAGONAL INSULATING UNIVERSAL STICK

Function and use

Ergonomic grip thanks to its pentagonal shape which is more adapted to the natural shape of the hand. The pentagonal insulating universal stick allows the use of tools with a universal attachment. Universal end fittings are located at each end of the stick.

Features

Insulating tube in pentagonal shape, fiberglass over the foam core.
Manufactured in accordance with ASTM F711 and IEC60855-1 standards.
Universal end fittings with thumbscrews (M8 thread), made of corrosion-resistant metal.

Catalog No.	Total length (m)	Total length (.ft and .in)	Insulated length (m)	Insulated length (.ft and .in)	Tube Ø (mm)	Tube Ø (inch)	Approx. weight (kg)	Approx. weight (lbs)
LW03-07-32P-180	1,8	5 ft 10 in	1,7	5 ft 6 in	32	1 ¼	1,2	2,6
LW03-07-32P-255	2,55	8 ft 4 in	2,35	7 ft 8 in	32	1 ¼	1,7	3,7
LW03-07-32P-315	3,15	10 ft 4 in	2,95	9 ft 8 in	32	1 ¼	2	4,4
LW03-07-39P-315					39	1 ½	2,7	6,0
LW03-07-32P-375	3,75	12 ft 3 in	3,55	11 ft 7 in	32	1 ¼	2,4	5,3
LW03-07-39P-375					39	1 ½	3,6	7,9

* Other lengths available on request (subject to volume)

Detail of end caps without protective cap

SECTIONAL HEXAGONAL STICK

Function and use

Extension pole elements are used singly or in combination, regardless of their diameter. The universal end fitting allows the use of tools with a universal attachment such as insulator brushes.

Features

Insulating tube, fiberglass over the foam core.
Manufactured in accordance with ASTM F711 and IEC60855-1 standards.
Hexagonal male and female sockets for each pole section accompagnied with locking screw-nut, made of corrosion-resistant metal.
Each element has a male and a femalesocket protected by a synthetic cap.

Catalog No.	Total length (m)	Total length (.ft and .in)	Insulated length (m)	Insulated length (.ft and .in)	Tube Ø (mm)	Tube Ø (inch)	Approx. weight (kg)	Approx. weight (lbs)
LW03-08-32-208	2,08	6 ft 9 in	1,81	5 ft 11 in	32	1 ¼	2	4,4
LW03-08-39-208					39	1 ½	2,1	4,6
LW03-08-32-308	3,08	10 ft 1 in	2,81	9 ft 2 in	32	1 ¼	2,6	5,7
LW03-08-39-308					39	1 ½	2,8	6,2

* Pole element sold without accessories

ACCESSORIES

Universal end fitting female socket hexagonal LW03-08-EUEHF

Universal end fitting male socket hexagonal LW03-08-EUEHF

Thighting end fitting hexagonal LW03-08-ESEHM

Thighting end fitting for torque wrench LW03-08-ESCD

Guiding funnel LW03-08-CG

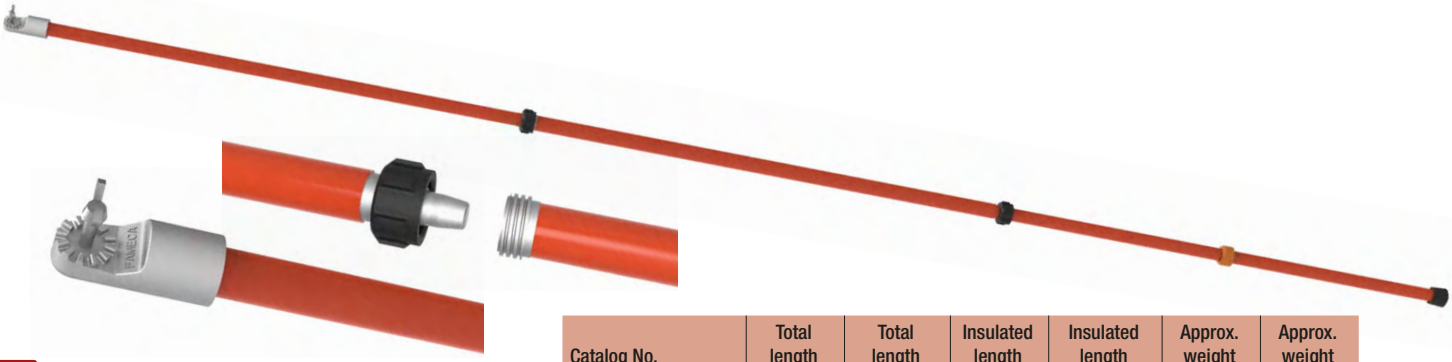

SECTIONAL UNIVERSAL STICK

Function and use

Sectional universal stick is used to attach tools with a universal attachment to perform various operations.
Example: cleaning conductors, screwing and unscrewing, pruning.

Features

Insulating tube Ø 32 mm / 1 ¼", fiberglass over the foam core.
Manufactured in accordance with ASTM F711 and IEC60855-1 standards.
Pole éléments are fitted with conical aluminium sockets and screw-nut locking.
Composition:

- A primary element is equipped with a hand guard.
- A terminal element with an aluminium Universal end fitting.
- If necessary, one or more intermediate extensions.

Catalog No.	Total length (m)	Total length (.ft and .in)	Insulated length (m)	Insulated length (.ft and .in)	Approx. weight (kg)	Approx. weight (lbs)
BASIC ELEMENT						
LW03-09-32-EB-100	1	3 ft 3 in	0,3	0 ft 11 in	0,7	1,5
LW03-09-32-EB-150	1,50	4 ft 11 in	0,5	1 ft 7 in	0,95	2,1
LW03-09-32-EB-200	2	6 ft 6 in	0,8	2 ft 7 in	1,2	2,6
LW03-09-32-EB-250	2,50	8 ft 2 in	1,1	3 ft 7 in	1,5	3,3
EXTENSION ELEMENT						
LW03-09-32-ER-100	1	3 ft 3 in	0,85	2 ft 9 in	0,8	1,8
LW03-09-32-ER-150	1,50	4 ft 11 in	1,385	4 ft 6 in	1	2,2
LW03-09-32-ER-200	2	6 ft 6 in	1,85	6 ft 0 in	1,3	2,9
LW03-09-32-ER-250	2,50	8 ft 2 in	2,35	7 ft 8 in	1,5	3,3
TERMINAL ELEMENTS						
LW03-09-32-ET-100	1	3 ft 3 in	0,85	2 ft 9 in	0,8	1,8
LW03-09-32-ET-150	1,50	4 ft 11 in	1,385	4 ft 6 in	1	2,2
LW03-09-32-ET-200	2	6 ft 6 in	1,85	6 ft 0 in	1,3	2,9
LW03-09-32-ET-250	2,50	8 ft 2 in	2,35	7 ft 8 in	1,5	3,3

UNIVERSAL HANDLE

Function and use

The Universal handle is equipped with universal end fitting.
It facilitates the usage of universal tools when working with insulating gloves.

Catalog No.	LW03-10-32

Features

Insulating tube (Ø 32 mm / 1 ¼")
Fiberglass over the foam core. Manufactured in accordance with ASTM F711 and IEC60855-1 standards. Universal metal end-fitting.
Total length: 0.50 m / 1'7" - Insulating length: 0.40 m / 1'3" - Approximate weight: 0.40 kg / 0,88 lbs

PENTAGONAL UNIVERSAL HANDLE

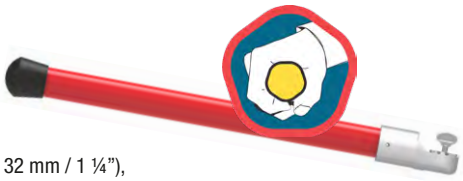

Function and use

Ergonomic grip thanks to its pentagonal shape which is more adapted to the natural shape of the hand. The pentagonal universal handle is equipped with universal end fitting.
It facilitates the usage of universal tools when working with insulating gloves.

Features

Pentagonal shape insulating tube (Ø 32 mm / 1 ¼"),
Fiberglass over the foam core. Manufactured in accordance with ASTM F711 and compliant with IEC60855-1 standards. Universal metal end-fitting.
Total length: 0.50 m / 1'7" - Insulating length: 0.40 m / 1'3" - Approximate weight: 0.40 kg /0,88 lbs

Catalog No.	LW03-11-32P

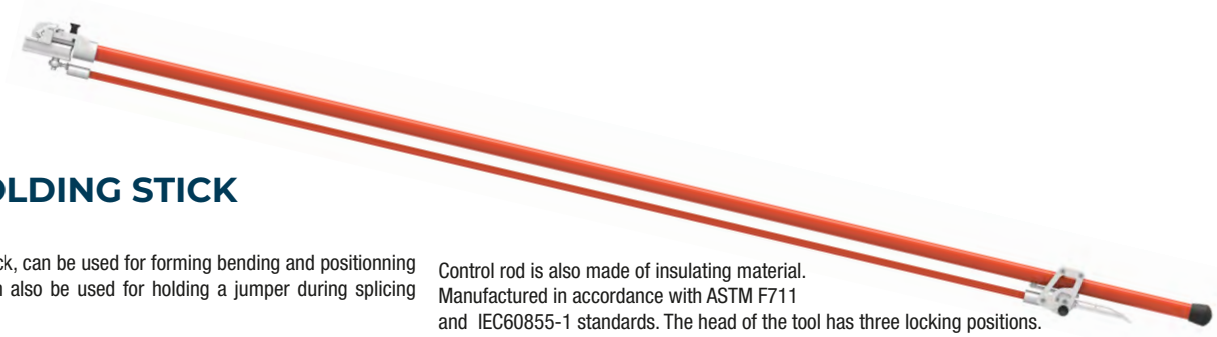

WIRE HOLDING STICK

Function and use

The wire holding stick, can be used for forming bending and positionning jumper wires. It can also be used for holding a jumper during splicing operations.

Features

Insulating tube (Ø 32 mm / 1 ¼"), fiberglass over the foam core.
Control rod is also made of insulating material.
Manufactured in accordance with ASTM F711 and IEC60855-1 standards. The head of the tool has three locking positions.
No pre-setting necessary, jaws will tighten automatically. The control head and handle are made of corrosion protected metal. The control lever is locked by means of a toggle lock.

Catalog No.	Total length (m)	Total length (.ft and .in)	Insulated length (m)	Insulated length (.ft and .in)	Tube Ø (mm)	Tube Ø (inch)	Control rod Ø (mm)	Control rod Ø (inch)	Clamping capacity Ø (mm)	Clamping capacity Ø (inch)	Approx. weight (kg)	Approx. weight (lbs)
LW03-12-32-180	1,80	5 ft 10 in	1,25	4 ft 1 in	32	1 ¼	15	3/5	4 to 25	0,162 (#6) to 1"	2,3	5,1
LW03-12-32-260	2,60	8 ft 6 in	1,95	6 ft 4 in							3,2	7,1
LW03-12-32-300	3	9 ft 10 in	2,35	7 ft 8 in							3,9	8,6
LW03-12-32-360	3,60*	11 ft 9 in	2,95	9 ft 8 in							4,8	10,6

*This product has an intermediate guide

TIE-WIRE CUTTER

Function and use

The tie-wire cutter is used to cut binding wires:
Insert the wire cutter into the groove of the pin insulator.
If necessary create a gap between the insulator and the binding wire with the help of the tie wire cutter blade.
When a cut is made in the immediate vicinity of a line conductor and in order not to injure the conductor, it is recommended to position the cutter sideways parallel to the conductor.

Features

Insulating tube (Ø 32 mm / 1 ¼"), fiberglass over the foam core. Control rod is alos made of insulating material.
Manufactured in accordance with ASTM F711 and IEC60855-1 standards.
Side cutter, removable, made of corrosion protected metal
Replacement cutting head: **(Réf. LW03-13-PINCE)**
See cutting capacities in table below.

Catalog No.	Total length (m)	Total length (.ft and .in)	Insulated length (m)	Insulated length (.ft and .in)	Tube Ø (mm)	Tube Ø (inch)	Control rod Ø (mm)	Control rod Ø (inch)	Clamping capacity Ø (mm)	Clamping capacity Ø (inch)	Approx. weight (kg)	Approx. weight (lbs)
LW03-13-32-270	2,7	8 ft 10 in	1,60	5 ft 2 in	32	1 ¼	10	2/5	Annealed copper 5 Semi-hard aluminium 5.8	Annealed copper 0,2" Semi-hard aluminium 0,22"	3,7	8,2

WIRE CUTTER WITH LEVER

Function and use

The wire cutter is used to cut wires and conductors.
See cutting capacities in table below.

Features

Insulating tubes, fiberglass over the foam core.
Solid control rod.
Manufactured in accordance with ASTM F711 and IEC60855-1 standards.
Replacement cutting head: Ref. LW03-14-TC

Catalog No.	Total length (m)	Total length (.ft and .in)	Insulated length (m)	Insulated length (.ft and .in)	Tube Ø (mm)	Tube Ø (inch)	Control rod Ø (mm)	Control rod Ø (inch)	Cutting capacity	Cutting capacity	Approx. weight (kg)	Approx. weight (lbs)
LW03-14-39-200	2	6 ft 6 in	1	3 ft 3 in	39	1 ½	15	3/5	117mm² Ø13,4mm	4/0 230 KCMIL	3,5	7,7
LW03-14-39-270	2,7	8 ft 10 in	1,7	5 ft 6 in							4,2	9,3
LW03-14-39-320	3,2	10 ft 5 in	2,2	7 ft 2 in							4,7	10,4
LW03-14-39-360	3,6	11 ft 9 in	2,6	8 ft 6 in							5,1	11,2

RACHET WIRE CUTTER

Function and use

The rachet wire cutter is used to cut wires and conductors.
See cutting capacities in table below.

Features

Insulating tubes, fiberglass over the foam core.
Manufactured in accordance with ASTM F711 and IEC60855-1 standards.
Solid control rod. Metal cutting head. Replacement cutting head: Ref. LW03-15-TC.

Catalog No.	Total length (m)	Total length (.ft and .in)	Insulated length (m)	Insulated length (.ft and .in)	Tube Ø (mm)	Tube Ø (inch)	Control rod Ø (mm)	Control rod Ø (inch)	Cutting capacity	Cutting capacity	Approx. weight (kg)	Approx. weight (lbs)
LW03-15-39-240	2,4	7 ft 10 in	0,18 + 1,20	7" + 3' 11"	32	11/4"	10	2/5	To 228 mm² Ø17 mm	450 KCMIL Ø0.66 in	5,5	12,1
LW03-15-39-360	3,6	11 ft 9 in	0,18 + 2,40	7" + 7' 22"							7	15,4

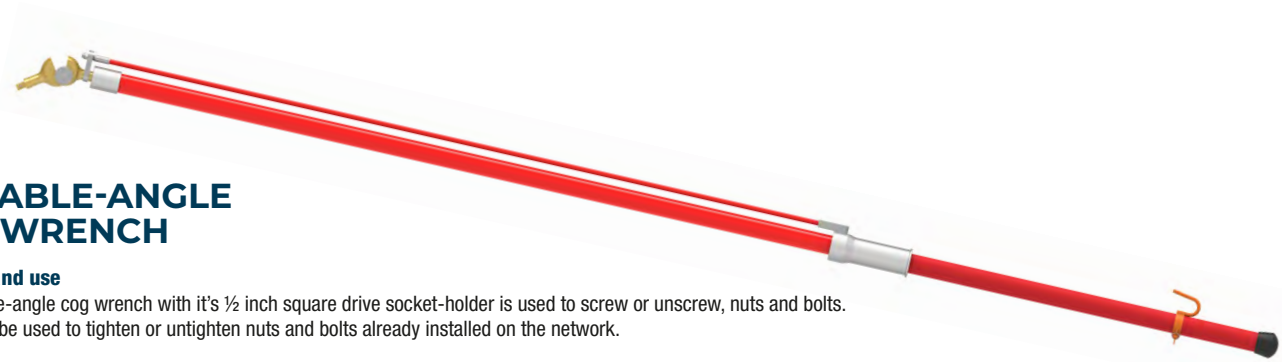

VARIABLE-ANGLE COG WRENCH

Function and use

The variable-angle cog wrench with it's ½ inch square drive socket-holder is used to screw or unscrew, nuts and bolts.
It must not be used to tighten or untighten nuts and bolts already installed on the network.

Features

Insulating tubes, fiberglass over the foam core. Solid control rod.
Manufactured in accordance with ASTM F711 and IEC60855-1 standards.
Control head and sleeve made of metal.
Variable angle cog driven socket holder.
Socket capacity: Standard series 12.7 mm (½ inch) square socket.

Catalog No.	Total length (m)	Total length (.ft and .in)	Insulated length (m)	Insulated length (.ft and .in)	Tube Ø (mm)	Tube Ø (inch)	Control rod Ø (mm)	Control rod Ø (inch)	Approx. weight (kg)	Approx. weight (lbs)
LW03-16-39-250	2,5	8 ft 2 in	1,4	4 ft 7 in	39	1 ½	15	3/5	3	6,6
LW03-16-39-315	3,15	10 ft 4 in	2,05	6 ft 8 in					4	8,8

PPOLE - STANDARD

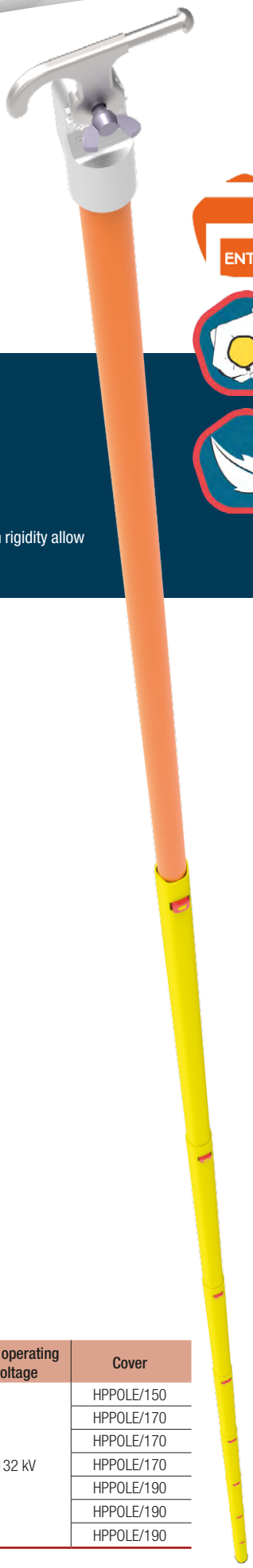

INSULATING POLE - STANDARD

A solution for all tensions and heights up to 12m /39'4"

Function and use

CEI62193, CEI60855-1 / ASTM F1826, ASTM F711

The telescopic pole reaches heights of up to 12m / 39'4" while maintaining a folded length of 1.78m / 5'10".

The pole consists of 3 to 9 elements, which can be adapted to all configurations of use. Its low weight and high rigidity allow for easier handling and more precise movements.

Tips

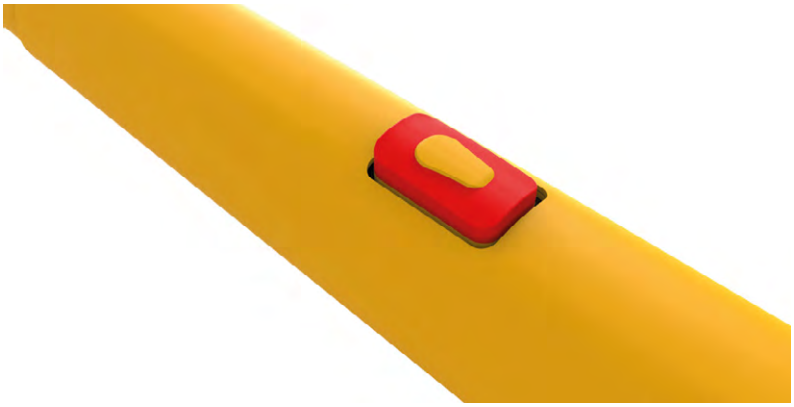

Features

Insulating telescopic pole consisting of :

- 2 to 8 pentagonal hollow tubes according to IEC 61235
- The top section is ø28 mm / 1" Fiberglass tube over foam core manufactured in accordance with ASTM F711 and IEC60855-1 standards
- 1 base plate to protect the boom foot
- 1 universal attachment for a wide range of accessories
- 1 manoeuvring hook

Catalog No.	Number of items	Unfolded length (m)	Unfolded length (.ft and .in)	Folded length (mm)	Folded length (.ft and .in)	Max operating voltage	Cover
PPOL3/035*	3	3,7	12 ft 1 in	1,45	4 ft 9 in	132 kV	HPPOLE/150
PPOL4/050*	4	5	16 ft 4 in	1,51	4 ft 11 in		HPPOLE/170
PPOL5/060*	5	6,3	20 ft 8 in	1,58	5 ft 2 in		HPPOLE/170
PPOL6/075*	6	7,7	25 ft 3 in	1,65	5 ft 4 in		HPPOLE/170
PPOL7/090*	7	9,1	29 ft 10 in	1,71	5 ft 7 in		HPPOLE/190
PPOL8/105*	8	10,6	34 ft 9 in	1,78	5 ft 10 in		HPPOLE/190
PPOL9/120*	9	12	39 ft 4 in	1,78	5 ft 10 in		HPPOLE/190

* Add the part No. of the desired Tips.

PPOLE - MEASUREMENT

INSULATING TELESCOPIC POLE - FOR MEASURING

INDEBTED GRADUATIONS, printed in the substrate, resistant to UV rays and handling of the pole

Function and use

CEI62193, CEI60855-1 / ASTM F1826, ASTM F711

The telescopic measuring pole has a scale on each of its parts to comfortably measure any height between 3m and 12m / 9'10" to 39'4".

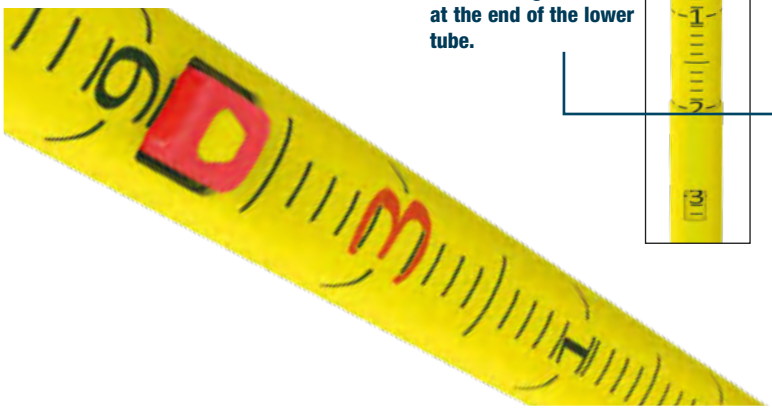

Features

Insulating telescopic pole consisting of :

- 2 to 8 pentagonal hollow tubes according to IEC 61235
- The top section is ø28 mm / 1" Fiberglass tube over foam core manufactured in accordance with ASTM F711 and IEC60855-1 standards
- 1 base plate to protect the boom foot
- 1 universal attachment for a wide range of accessories
- 1 manoeuvring hook

Catalog No.	Number of items	Unfolded length (m)	Unfolded length (.ft and .in)	Folded length (mm)	Folded length (.ft and .in)	Max operating voltage	Cover
PPOL5/060MU	5	6,3	20 ft. 8 in.	1,58	5 ft. 2 in.	132 kV	HPPOLE/170
PPOL6/075MU	6	7,7	25 ft. 3 in.	1,65	5 ft. 4 in.		HPPOLE/170
PPOL7/090MU	7	9,1	29 ft. 10 in.	1,71	5 ft. 7 in.		HPPOLE/190
PPOL8/105MU	8	10,6	34 ft. 9 in.	1,78	5 ft. 10 in.		HPPOLE/190
PPOL9/120MU	9	12	39 ft. 4 in.	1,78	5 ft. 10 in.		HPPOLE/190

PPOLE - REINFORCED

INSULATING TELESCOPIC POLE - REINFORCED

IMPROVED RIGIDITY, doubled modulus of elasticity of the end element for an even more precise gesture

Function and use : IEC62193, IEC60855-1 / ASTM F1826, ASTM F711
The telescopic pole reaches heights of up to 10.8m / 35'5" while maintaining a folded length of 1.76m / 5'9".
The pole consists of 2 to 8 elements, which can be adapted to all configurations of use. This reinforced version provides even greater rigidity and thus allows for more precise handling and heavy manoeuvring loads (MALT, cable cutters, etc.)

Tips

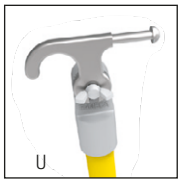

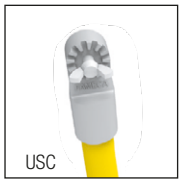

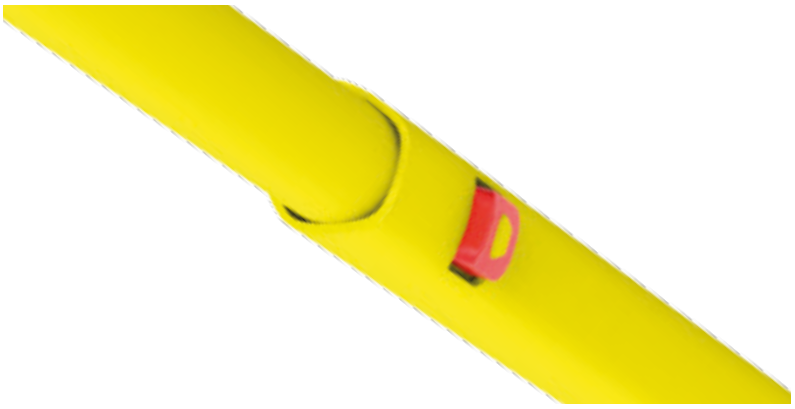

Features

Insulating telescopic pole consisting of :
- 1 to 7 pentagonal hollow tubes according to IEC 61235
- The top section is ø32 mm / 1 ¼" fiberglass tube over foam core manufactured in accordance with ASTM F711 and IEC60855-1 standards
- 1 base plate to protect the boom foot
- 1 universal attachment for a wide range of accessories
- 1 manoeuvring hook

Catalog No.	Number of items	Unfolded length (m)	Unfolded length (.ft and .in)	Folded length (mm)	Folded length (.ft and .in)	Max operating voltage	Cover
PPOLR2/025*	2	2,6	8 ft. 6 in.	1,4	4 ft. 7 in.	132 kV	HPPOLE/150
PPOLR3/040*	3	3,84	12 ft. 7 in.	1,44	4 ft. 8 in.		HPPOLE/150
PPOLR4/050*	4	5,15	16 ft. 10 in.	1,56	5 ft. 1 in.		HPPOLE/170
PPOLR5/065*	5	6,52	21 ft. 4 in.	1,63	5 ft. 4 in.		HPPOLE/170
PPOLR6/080*	6	7,9	25 ft. 11 in.	1,69	5 ft. 6 in.		HPPOLE/170
PPOLR7/095*	7	9,3	30 ft. 6 in.	1,76	5 ft. 9 in.		HPPOLE/190
PPOLR8/110*	8	10,8	35 ft. 5 in.	1,76	5 ft. 9 in.		HPPOLE/190

* Add the part No. of the desired Tips.

INSULATOR RUBBER SKIRTS

Function and use

The skirts are mounted on the insulating tubes Ø 32, 39, 64 mm. / 1 ¼", 1 ½", 2 ½"
In the working position, the larger diameter part of the skirts must always face downwards.
In all cases, skirts must be used in pairs.
A pair of skirts consists of two skirts joined together.

Skirts are used:
to avoid the water flow along an insulating pole whilst working in wet conditions.
In this case, the pole is equipped with a pair of skirts.

The insulating tubes must be equipped with :
A pair of skirts, if the voltage of the network is 63 kV, 90 kV or 150 kV,
Two pairs of skirts, if this voltage is 225 kV or 400 kV.

Note: The skirt fitting tool must be coated with silicone grease before fitting the skirts.

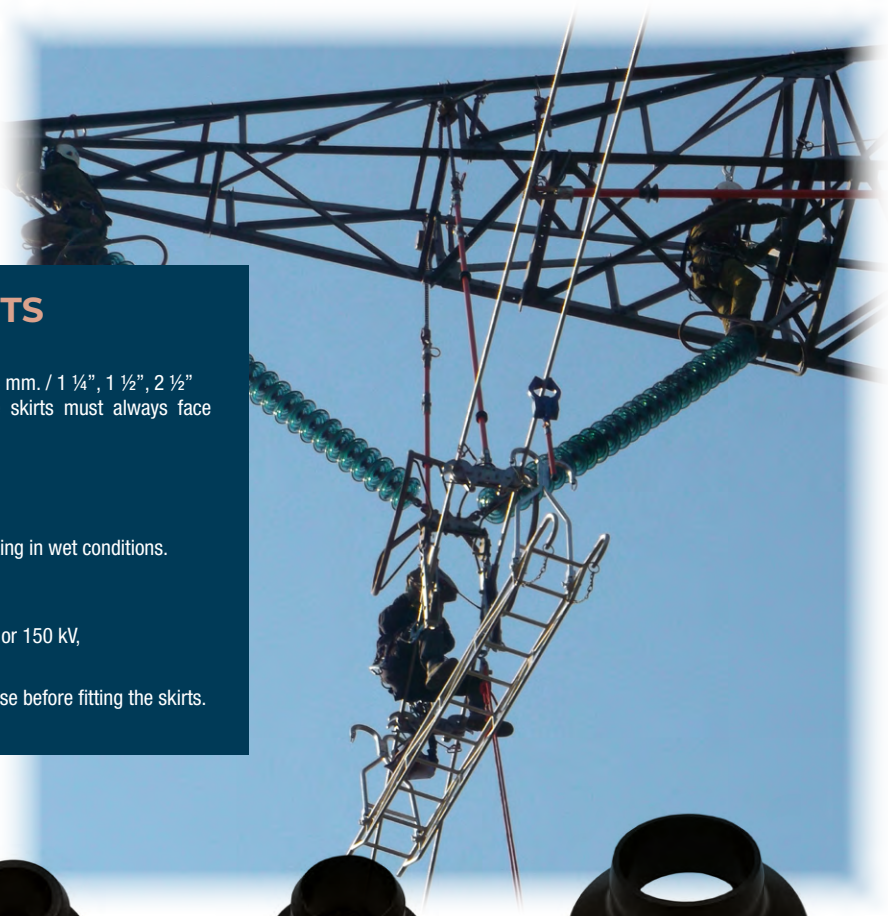

	Diameter of the pole		
	32 mm / 1 ¼"	39 mm / 1 ½"	64mm / 2 ½"
Skirts	**LW03-17-J-32**	**LW03-17-J-39**	**LW03-17-J-64**
Inner diameter (mm)	30	35	60
Inner diameter (inch)	1 1/6	1 3/8	2 1/3
Outside diameter (mm)	70	70	121
Outside diameter (inch)	2 ¾	2 ¾	4 ¾
Height (mm)	37	37	43
Height (inch)	1 ½	1 ½	1 2/3
Approximate weight (kg)	0,04	0,02	0,12
Approx. weight (lbs)	0,1	0,1	0,3

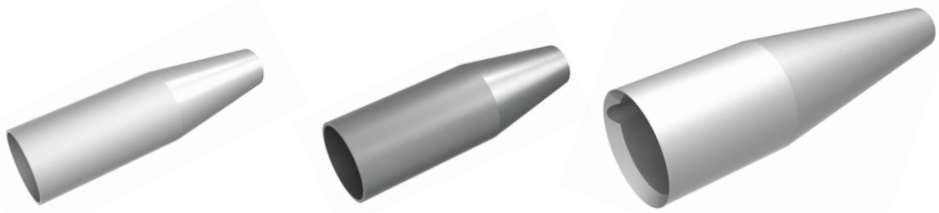

	For poles of diameter		
	32 mm / 1 ¼"	39 mm / 1 ½"	64mm / 2 ½"
Skirt fitting tools	**LW03-17-OPJ-32**	**LW03-17-OPJ-39**	**LW03-17-OPJ-64**
Length (mm)	170	170	245
Length (inch)	6 2/3	6 2/3	9 2/3
Ø at base (mm)	55	55	78
Ø at base (inch)	2 1/6	2 1/6	3
Approximate weight (kg)	0,4	0,45	1,1
Approx. weight (lbs)	0,9	1,0	2,4

NOTES

CONDUCTOR SUPPORT TOOLS

CONDUCTOR SUPPORT TOOLS

CONDUCTOR SUPPORT STICK

FUNCTION AND USE

The conductor support stick is used to grip a conductor or other accessories in order to hold them in a certain position or to move them when necessary.
It is commonly used in combined applications, such as triangulation or mast assemblies, and is referred to as a support pole or spacer pole, depending on its function.

FEATURES

Insulating tubes, fiberglass over the foam core.
Manufactured in accordance with ASTM F711 and IEC60855-1 standards.
Clamp and swivel ring, made of corrosion resistant metal.

Catalog No.	Total length (m)	Total length (.ft and .in)	Insulated length (m)	Insulated length (.ft and .in)	Tube Ø (mm)	Tube Ø (inch)	Wire Size (mm)	Wire Size (in)	Working Load Limit (daN)		Working Load Limit (daN)		Approx. weight (kg)	Approx. weight (lbs)
IEC 60832-1									Compression	traction	Compression	traction		
LW04-01A-39-270	2,70	8 ft 10 in	2,70	7 ft 10 in	39	1 1/2	4 to 50	0,16" to 2,25"	55	650	121	1433	3,5	7,7
LW04-01B-39-270														
LW04-01A-39-330	3,30	10 ft 9 in	3,30	9 ft 10 in	39	1 1/2			50	650	110	1433	4,3	9,5
LW04-01B-39-330														
LW04-01A-64-390	3,90	12 ft 9 in	3,90	11 ft 9 in	64	2 1/2			220	685	485	1510	9,3	20,5
LW04-01B-64-390														
LW04-01A-64-465	4,65	15 ft 3 in	4,65	14 ft 3 in	64	2 1/2			220	685	485	1510	11,6	25,6
LW04-01B-64-465														
LW04-01A-64-510	5,10	16 ft 8 in	5,10	14 ft 9 in	64	2 1/2			130	685	287	1510	13,5	29,8
LW04-01B-64-510														

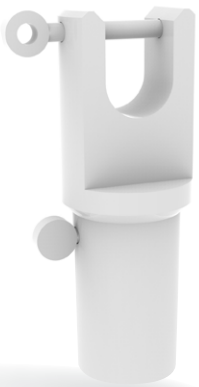

MIDDLE PHASE FORK

FUNCTION AND USE

The mid-phase fork is mounted on a 64 mm / 2 ½" dia. conductor pole on the swivel side and can thus be used as a mast. No mechanical force must be exerted on the locking pin.

FEATURES

Body made of white synthetic material.
Dimensions: 350 x 200 x 120 mm / 1'1" x 7" x 4"
Approximate weight: 1.8 kg /4 lbs
Working Load Limit (WLL): 265 daN / 585 lbs vertically

Catalog No.	**LW04-02**

OFF-SET EYE

FUNCTION AND USE

Attached to the swivel ring of a 64 mm / 2 ½" diameter conductor pole, the offset ring is designed to receive a manoeuvring rope or one of the hooks of a rope block, this allows to exert a force parallel to the axis of the pole.

FEATURES

IEC 61236 standard
Lifting accessory made of metal protected against corrosion.
Dimensions: 150 x 115 x 45 mm / 6" x 4 ½" x 1 7/9"
Approximate weight: 0.6 kg / 1,32lbs
Working Load Limit (WLL): 300 daN / 661 lbs

Catalog No.	**LW04-03**

RIGID WIRE TONG STIRRUP

FUNCTION AND USE

Attached to a Ø64 mm / 2 ½" conductor pole or it's head, the stirrup is used to support the conductor pole with another conductor pole.
This prevents kinking of the conductor by attaching the swivel to the conductor pole.
There is only one conductor pole hooked onto the conductor.
The clevis pivots allowing the conductor pole to assume the correct position.
This avoids the kinking caused by two conductor poles be used side by side on the conductor.
Improves the operator's visibility and accessibility to the work to be done.

FEATURES

IEC 61236 standard
Dimensions: 300 x 13 x 6 mm / 11 $^{4}/_{5}$" x ½" x $^{1}/_{4}$"
Working Load Limit (WLL): 160 daN / 352 lbs
Tightening torque of the clamp : 17 N.m / 12.5 ft.lb
Approximate weight: 1.3 kg / 2,87 lbs

Catalog No.	LW04-04

WIRE TONG SWIVEL

FUNCTION AND USE

Attached to a Ø64 mm / 2 ½" conductor pole or it's head, the stirrup is used to support the conductor pole with another conductor pole or a strain link stick.

FEATURES

IEC 61236 standard
Dimensions: 300 x 13 x 6 mm / 11 $^{4}/_{5}$" x ½" x $^{1}/_{4}$"
Working Load Limit (WLL) before slipage is 220 daN. / 485 lbs perperpendicular to the stirrup
Traction 330 daN. / 727 lbs in the same axis as the stirrup
Tightening torque of the clamp: 17 N.m / 12.53 ft.lb
Approximate weight: 1.3 kg / 2,87 lbs

Catalog No.	LW04-05

MECHANICAL RESTRAINT SYSTEM

Catalog No.	LW04-06

FUNCTION AND USE

The mechanical restraint device is used to mechanically shunt a damaged conductor, with cross-sections greater than or equal to 12 mm² (23 KCMIL), and less than 148 mm² (292 KCMIL). The device does not ensure electrical continuity. Under no circumstances does the mechanical restraint system replace a mechanical tension recovery device exemple Strap hoist or cable hoist.

FEATURES

One left and one right cable clamp with two ring screws and a screw jack take-up device
Overall dimensions: 390 x 65 x 220 mm / 1' 3" x 2 $^{5}/_{9}$" x 8 $^{2}/_{3}$"
Screw jack stroke: 30 mm / 1 $^{1}/_{6}$"
Two flexible and two rigid, removable connecting rods
A locking hook with a hinged ring ref
A double clevis swivel
Working Load Limit (WLL): 800 daN / 1763 lbs.
Tightening torque on the conductor: 25 N.m / 18.44 ft.lb

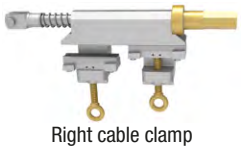
Right cable clamp

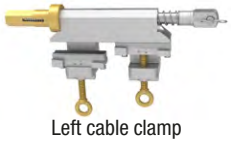
Left cable clamp


Swivel


Hook

Catalog No.	Length (mm)	Length (in)	Ø (mm)	Ø (in)	Approx. weight (kg)	Approx. weight (lbs)
Right and left cable clamp						
LW04-06-SCD (Right)	390	15 1/3	-	-	2,5	5,5
LW04-06-SCG (Left)	390	15 1/3	-	-	2,5	5,5
Soft stem						
LW04-06-TS-700	700	27 5/9	8	1/3	0,3	0,7
LW04-06-TS-1250	1250	49 1/5	8	1/3	0,4	0,9
Rigid rod						
LW04-06-TR-700	700	27 5/9	15	3/5	0,4	0,9
LW04-06-TR-1250	1250	49 1/5	15	3/5	0,7	1,5
Accesories (Swivel and HOOK)						
LW04-06-EM (Swivel)	110	4 1/3	40	1 4/7	0,2	0,4
LW04-06-CR (Hook)	110	4 1/3	-	-	0,5	1,1

CONDUCTOR SUPPORT TOOLS

TENSION PULLER

FUNCTION AND USE

Equipped with a hook, the tension puller, used in association with a come along clamp, is used to take up the mechanical tension of a conductor by means of the screw jack.
It allows, the replacement of an anchor chain whose insulators have a diameter inferior of 240 mm / 9'.

FEATURES

Insulating tubes, fiberglass over the foam core.
Manufactured in accordance with ASTM F711 and IEC 60855-1 standards.
The screw jack is operated by means of 24x27mm open-end ratchet.
The cover, on the earth side is made of a synthetic insulated material.
Dimensions: 1300x410x150 mm / 4' 3" x 1' 4" x 6'
Approximate weight: 7 kg / 15,4 lbs with cover
Working Load Limit (WLL) : 1100 daN / 2425 lbs
Tube diameter: Ø39 mm / 1 ½"

Catalog No.	LW04-07

Insulating cover and fine point hook included.
The tension puller is delivered without a holding device (to be ordered according to ref. opposite).

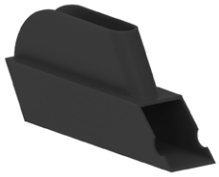

Insulating cover

Catalog No.	LW04-07-CI

Holding device model 1:
Metal body protected against corrosion.
Length: 125mm / 4"
Approximate weight: 0.28 kg / 0,62 lbs

Catalog No.	LW04-07-DM1

Holding device model 2:
Body in synthetic material.
Bolts and locking pin in corrosion protected metal.
Length: 380 mm / 1' 2"
Approximate weight: 0.25 kg / 0,55lbs

Catalog No.	LW04-07-DM2

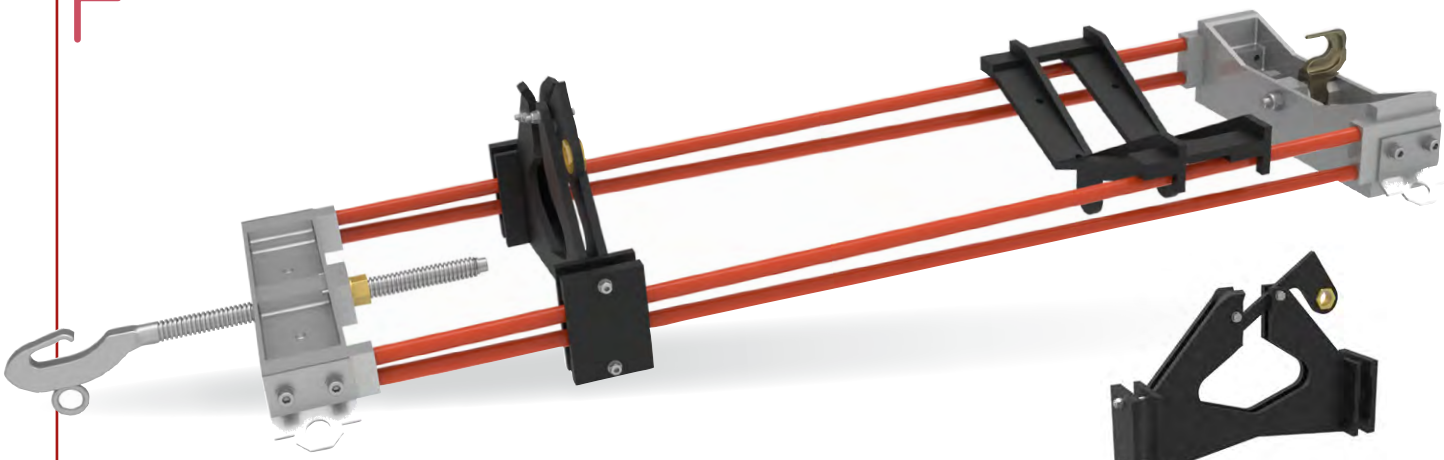

SYMMETRIC TENSION PULLER

FUNCTION AND USE

Equipped with a hook, the symmetric tension puller, used in association with a come along clamp, is used to take up the mechanical tension of a conductor by means of the screw jack.
It allows, the replacement of an anchor chain whose insulators have a diameter inferior or equal to 254 mm / 10" in diameter.

Catalog No.	LW04-08

Complete with holding device and Insulator holder

FEATURES

IEC 60832-1
Insulating fiberglass rods.
Manufactured in accordance with ASTM F711 and IEC60855-1 standards.
The screw jack is operated by means of 24x27mm open-end ratchet.
Maximum length: 1.83 m / 4' 8"
Minimum length: 1.23 m / 4'
Overall width: 400 mm / 1' 3"
Width between rods: 290 mm / 11"
Rods diameter: 15 mm / 3/5"
Working Load Limit (WLL): 2200 daN / 4850 lbs
Approximate weight: 7 kg / 15,43 lbs

- Holding device with locking cleat, removable, made of synthetic material.

Catalog No.	LW04-08-DM

- Insulator holder made of synthetic material

Catalog No.	LW04-08-SC

HOOKS FOR TENSION PULLERS

FUNCTION AND USE

The hooks are used to attach a tension puller to a network accessory.
Depending on the anchoring point available, choose one of the anchoring accessories below.

FEATURES

Corrosion-protected metal.

Catalog No.			Working Load Limit (daN)	Working Load Limit (lbs)	Approx. weight (kg)	Approx. weight (lbs)
LW04-09-CR1 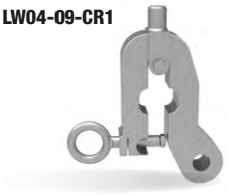	Hook for extension model 1	These hooks are to be used on clevis eye extension links that are not equipped with drilled holes.	1700	3748	0,6	1,3
LW04-09-CR2 	Hook for extension model 2		2200	4850		
LW04-09-CO 	Hook for OL 40	This hook allows the tension puller to be used on a network which has neither clevis eye extensions or attachment U-bolts. It is designed for use with the ball eyes OL 40 or OR 2.	1700	3748	0,3	0,7
LW04-09-CN 	Normal hook	These two hooks allows the anchoring of a tension puller on a stirrup or an automatic shackle.	1700	3748	0,3	0,7
LW04-09-CPF 	Fine hook		2200	4850	0,25	0,6
LW04-09-MA 	Automatic shackle	The automatic shackle is fixed in the hole of a clevis eye extension link. It can be opened and closed remotely with a clampstick or rotary prong.	1700	3748	0,5	1,1

INSULATING COUPLER

FUNCTION AND USE

The Insulating coupler is used to combine two tension pullers.
Example : when replacing two dead end anchoring by an alignment at the same time.

FEATURES

IEC 60832-1
Insulating tubes, fiberglass over the foam core, fitted with a corrosion-protected metal anchor shackle at each end. Manufactured in accordance with ASTM F711 and IEC60855-1 standards.

Catalog No.	**LW04-10**

Metal insert: 0.10 m / 4”
Insulating length: 0.40 m / 1’ 3” - Total length: 0.60 m / 1’ 11”
Tube diameter: 39 mm / 1 1/2”

Working Load Limit (WLL):
- Traction: 1300 daN / 2866 lbs
- Bending (with load mast): 200 daN per shackle / 440 lbs

Approximate weight: 1.6 kg / 3,53 lbs

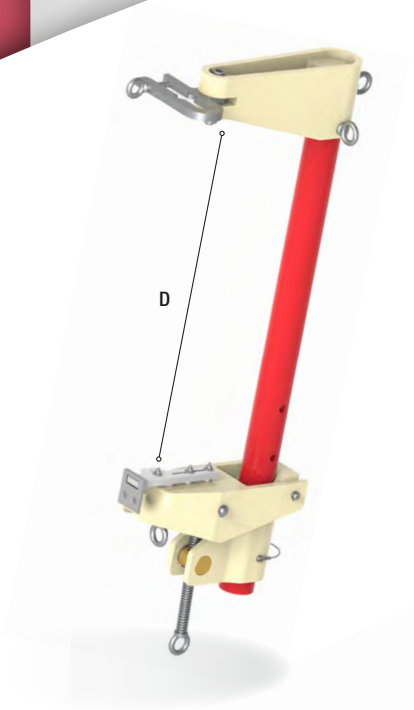

INSULATING SUSPENSION PULLER

FUNCTION AND USE

The insulating suspension puller is used to take up the mechanical tension of a suspension chain, for replacement. If work is interrupted, it may be left in place for a maximum of 7 days. After this period, the tool may no longer be removed under live conditions.

FEATURES

IEC 60832-1
Insulating tubes, fiberglass over the foam core, 51 mm / 2" diameter tube with positioning holes
Manufactured in accordance with ASTM F711 and IEC60855-1 standards.
Fixed flange glued, with its hook holder. Movable flange with conductor locking system, in synthetic material.
Lockable hook, pin, screws, adjustment system and grip rings, made of metal.
Dimensions of 4-hole model: 0.76 x 0.30 x 0.15 m / 2' 5" x 11" x 6"
Approximate weight: 6 kg / 13,23 lbs.

Catalog No.	LW04-11

Dimensions Settings

Adjustment distance D between hooking points (mm)			Working Load Limit (daN)	Working Load Limit (lbs)
	(mm)	(in)		
1st positioning hole	330 to 450	13" to 17 5/7"	300	661
2nd positioning hole	430 to 550	17" to 21 2/3"		
3rd positioning hole	490 to 610	19 2/7" to 24"		
4th positioning hole	550 to 670	21 2/3" to 26 3/8"		

Trolley wheel with eyebolt

Trolley wheel with hook

Pole clamp Ø64 mm with shackle

SUSPENSION CHAIN TROLLEY DEVICE

FUNCTION AND USE

The suspension chain handling device is used to move a suspension chain.

FEATURES

Insulating tubes, fiberglass over the foam core.
Removable insulator tray, made of light alloy.
The model 2 tray can be turned around to fit insulators of different sizes.

Light alloy and corrosion protected steel accessories	
Catalog No.	**Accessories**
LW07-13-64	Pole clamp Ø 64 mm (2 1/2") page 80
LW07-14-MAN	Shackle for pole clamp
LW10-02-PT	Trolley wheel with eyebolt
LW10-02-PC	Trolley wheel with hook

Trolley pole

Catalog No.	Designation	Total length L (m)	Total length L (.ft and .in)	Length of the insulating part (m)	Length of the insulating part (ft. in.)	Tube Ø (mm)	Tube Ø (in)	Ø inside the tray (mm)	Ø inside the tray (in)	Working load Limit (WLL) daN.	Working load Limit (WLL) lbs.	Approx. weight (kg)	Approx. weight (lbs)
LW10-02-CHEM300	Trolley pole	3	9 ft. 10 in.	2,86	9 ft. 4 in.	64	2,5	-	-	160	353	8,6	19
LW10-02-CHEM360	Trolley pole	3,60	11 ft. 9 in.	3,47	11 ft. 4 in.			-	-			9,3	21
LW10-02-PP1	Tray pole model 1	4,35	14 ft. 3 in.	3,45	11 ft. 3 in.			-	-			11,7	26
LW10-02-PP2	Tray pole model 2	4,35	14 ft. 3 in.	3,45	11 ft. 3 in.	-	-					11,7	26
LW10-02-P1	Tray model 1	-	-	-	-	-	-	270	10,6"			1,8	4
LW10-02-P2	Tray model 2	-	-	-	-	-	-	260 and 285	10,24" and 11,22"			2,5	6

SUSPENSION CHAIN TROLLEY DEVICE 63/90 KV

FUNCTION AND USE

The suspension chain trolley device for 63/90 kV is used to move a suspension chain on 63/90 kV overhead lines.

FEATURES

Insulating tubes, fiberglass over the foam core.
Insulator tray, made of synthetic material.

Trolley pole

Pole clamp Ø 39 mm with shackle

Trolley wheel

Metal accessories protected against corrosion	
Catalog No.	**Accessories**
LW07-13-39	Pole clamp Ø 39 mm (1 1/2") page 80
LW07-14-MAN	Shackle for pole clamp
LW10-03-PC	Trolley wheel with swivel hook

Catalog No.	Designation	Total length L (m)	Total length L (.ft and .in)	Tube Ø (mm)	Tube Ø (in)	Ø inside the tray (mm)	Ø inside the tray (in)	Working load Limit (WLL) daN.	Working load Limit (WLL) lbs.	Approx. weight (kg)	Approx. weight (lbs)
LW10-03-CHEM	Trolley pole	3	9 ft. 10 in.	39	1 1/2"	-	-	40	88	2,5	6
LW10-03-PP	Pole with tray	3,25	10 ft. 7 in.			285	11,22"			4,5	10

STRAIN LINK STICK

FUNCTION AND USE

The strain link stick is used as an intermediate insulator to exert tensile forces on a conductor or any appropriated accessories.

FEATURES

Insulating tubes, fiberglass over the foam core, diameter 32 mm / 1 ½"
Manufactured in accordance with ASTM F711 and IEC60855-1 standards.
Vice and swivel ring made of corrosion protected metal.
Tightening range: 6 to 19 mm / .22" to .75".

Catalog No.	Total length (m)	Total length (.ft and .in)	Insulated length (m)	Insulated length (.ft and .in)	Working Load Limit traction (daN)	Working Load Limit traction (lbs)	Approx. weight (kg)	Approx. weight (lbs)
IEC 60832-1								
LW04-12-32-100	1	3 ft 3 in	0,6	1 ft 11 in	1400	3086	1,6	3,5
LW04-12-32-150	1,5	4 ft 11 in	1,1	3 ft 7 in			2	4,4

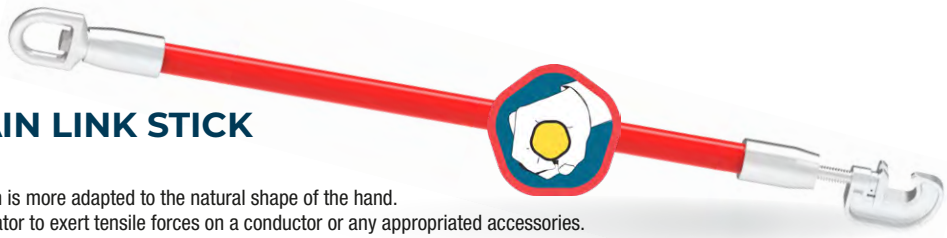

PENTAGONAL STRAIN LINK STICK

FUNCTION AND USE

Ergonomic grip thanks to its pentagonal shape which is more adapted to the natural shape of the hand.
The strain link stick is used as an intermediate insulator to exert tensile forces on a conductor or any appropriated accessories.

FEATURES

Pentagonal-shaped Insulating tubes, fiberglass over the foam core, diameter 32 mm / 1 ½"
Manufactured in accordance with ASTM F711 and compliant with IEC60855-1 standards.
Vice and swivel ring made of corrosion protected metal.
Tightening range: 6 to 19 mm / .22" to .75".

Catalog No.	Total length (m)	Total length (.ft and .in)	Insulated length (m)	Insulated length (.ft and .in)	Working Load Limit traction (daN)	Working Load Limit traction (lbs)	Approx. weight (kg)	Approx. weight (lbs)
IEC 60832-1 and ASTM F711								
LW04-13-32P-100	1	3 ft 3 in	0,6	1 ft 11 in	1400	3086	1,6	3,5
LW04-13-32P-150	1,5	4 ft 11 in	1,1	3 ft 7 in			2	4,4

CONDUCTOR SUPPORT TOOLS

ROLLER LINK STICKS

FUNCTION AND USE

The roller link stick is used for spreading and holding conductors at midspan when changing poles.
Applied to conductor at pole and pulled to position (midspan) with a rope pre-attached.
Also used for mesuring conductor to ground distance by attaching a rope to the swivel ring.

FEATURES

Insulating tubes, fiberglass over the foam core, diameter 32 mm / 1 1/2”
Manufactured in accordance with ASTM F711 and IEC60855-1 standards.
Metal head and swivel ring made of corrosion protected metal
Maximum opening: 35 mm / 1 3/8” - Tube diameter Ø32 / 1 1/4”
Approximate weight: 1.5 kg /3,31lbs

Catalog No.	Total length (m)	Total length (.ft and .in)	Insulated length (m)	Insulated length (.ft and .in)	Max. wire sire (mm)	Max. wire sire	Maximum working load in traction (daN)	Maximum working load in traction (lbs)	Approx. weight (kg)	Approx. weight (lbs)
IEC 60832-1										
LW04-14-32-150	1,5	4 ft 11 in	1,1	3 ft 7 in	30	To 1390 kcmil	450	992	2,0	4,4
LW04-14-32-210	2,1	6 ft 10 in	1,7	5 ft 6 in					2,5	5,5
LW04-14-32-390	3,9	12 ft 9 in	3,55	11 ft 7 in					3,0	6,6

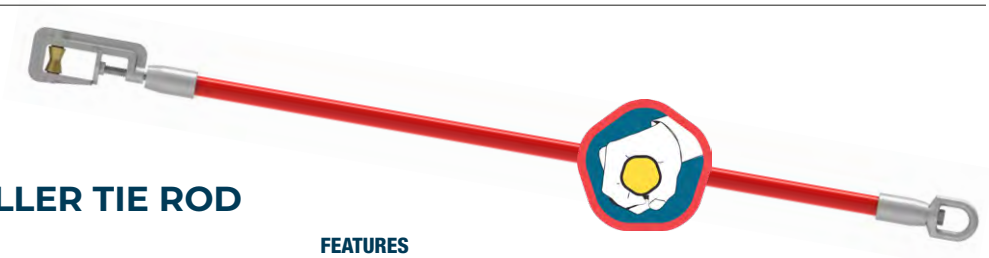

PENTAGONAL ROLLER TIE ROD

FUNCTION AND USE

Ergonomic grip thanks to its pentagonal shape which follows the shape of the hand.
The roller tie is used as an intermediate insulating part in a device that allows tensile forces to be transmitted to a workpiece or conductor trapped in the tool head and supported by the roller.
The roller tie is also used as an intermediate insulating piece in a device that measures the distance of a conductor from the ground, another conductor or any other obstacle.

FEATURES

Pentagonal-shaped Insulating tubes, fiberglass over the foam core, diameter 32 mm / 1 1/2”.
Manufactured in accordance with ASTM F711 and compliant with IEC60855-1 standards. Metal head and swivel ring made of corrosion protected metal.
Maximum opening: 35 mm / 1 3/8” - Tube diameter Ø32 / 1 1/4”
Approximate weight: 1.5 kg /3,31lbs

Catalog No.	Total length (m)	Total length (.ft and .in)	Insulated length (m)	Insulated length (.ft and .in)	Max. wire sire (mm)	Max. wire sire	Maximum working load in traction (daN)	Maximum working load in traction (lbs)	Approx. weight (kg)	Approx. weight (lbs)
IEC 60832-1										
LW04-15-32P-150	1,5	4 ft 11 in	1,1	3 ft 7 in	30	To 1390 kcmil	450	992	2,0	4,4
LW04-15-32P-210	2,1	6 ft 10 in	1,7	5 ft 6 in					2,5	5,5
LW04-15-32P-390	3,9	12 ft 9 in	3,55	11 ft 7 in					3,0	6,6

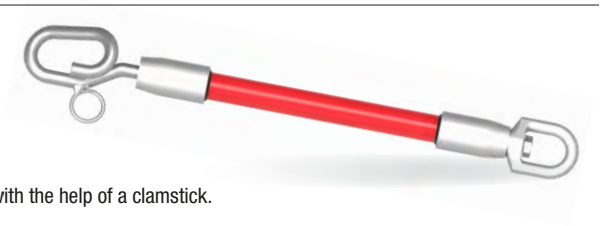

SPIRAL LINK STICK

FUNCTION AND USE

The spiral link stick replaces a strain link stick when a lineman cannot safely install one by hand.
A lifting eye fixed on the head enables the lineman to place the spiral link stick on the conductor with the help of a clamstick.

FEATURES

Insulating tubes, fiberglass over the foam core, diameter 32 mm / 1 1/2”
Manufactured in accordance with ASTM F711 and IEC60855-1 standards.
Metal spiral head protected against corrosion.

Catalog No.	Total length (m)	Total length (.ft and .in)	Insulated length (m)	Insulated length (.ft and .in)	Maximum working load in traction (daN)	Maximum working load in traction (lbs)	Approx. weight (kg)	Approx. weight (lbs)
IEC 60832-1								
LW04-16-32-080	0,8	2 ft 7 in	0,4	1 ft 3 in	1400	3086	1,6	3,5
LW04-16-32-150	1,5	4 ft 11 in	1,1	3 ft 7 in	1400	3086	2	4,4

ISOLINK

FUNCTION AND USE

The isolink, is generally used between a rachet Hoist and a conductor in order to insulate the hoist while doing hot-line work. A lifting eye fixed on the latch it allows the lineman to place the Isolink on the conductor with the help of a clamstick.

FEATURES

Insulating tubes, fiberglass over the foam core, diameter 32 mm / 1 1/4”
Manufactured in accordance with ASTM F711 and IEC60855-1 standards.
Metal hooks are protected against corrosion.

Catalog No.	Designation	Total length (m)	Total length (.ft and .in)	Insulated length (m)	Insulated length (.ft and .in)	Maximum working load in traction (daN)	Maximum working load in traction (lbs)	Approx. weight (kg)	Approx. weight (lbs)
ISOLINK-1-PTA	Isolating link stick with basic latch	0,5	1 ft. 7 in.	0,3	12”	1815	4000	1,6	3,5
ISOLINK-2-PTA	Isolating link stick with latch with eye	0,5	1 ft. 7 in.	0,3	12”	1815	4000	2	4,4

MULTI HEAD LINK STICK

FUNCTION AND USE

The multi head link stick is used as an intermediate insulating device that allows the operators to apply tensile forces to a workpiece or a conductor. The tool can be applied in different situations, depending on the choice of head choosen.

FEATURES

Insulating tubes, fiberglass over the foam core, diameter 32 mm / 1 1/4”
Manufactured in accordance with ASTM F711 and compliant with IEC60855-1 standards.
Metal head and swivel ring made of corrosion protected metal

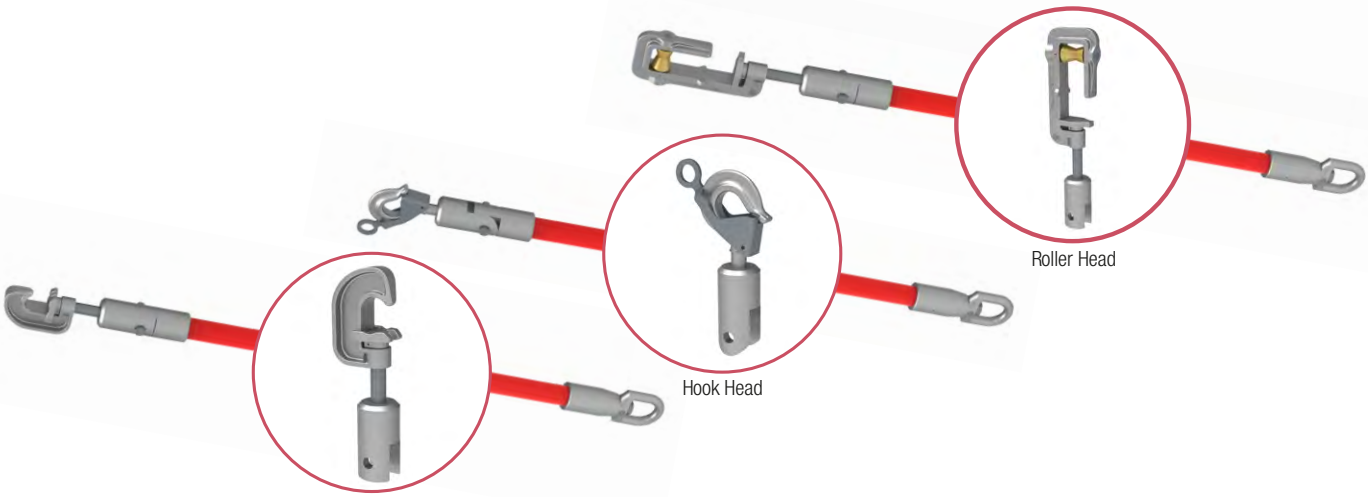

Catalog No.	Designation	Total length (m)	Total length (.ft and .in)	Insulated length (m)	Insulated length (.ft and .in)	Maximum working load in traction (daN)	Maximum working load in traction (lbs)	Approx. weight (kg)	Approx. weight (lbs)
LW04-19-100	Kit with tube and set of 3 heads	1	3 ft. 3 in.	0,6	1 ft. 11 in.	-	-	-	-
LW04-19-150	Kit with tube and set of 3 heads	1,5	4 ft. 11 in.	1,1	3 ft. 7 in.	-	-	-	-
LW04-19-ETAU	Strain Head	-	-	-	-	1400	3086	1,4	3,1
LW04-19-ROUL	Roller Head	-	-	-	-	450	992	1,4	3,1
LW04-19-CRO	Hook Head	-	-	-	-	1400	3086	1,2	2,6
LW04-19-TUBE-100	Tube with end fitting	1	3 ft. 3 in.	0,6	1 ft. 11 in.	-	-	3	6,6
LW04-19-TUBE-150	Tube with end fitting	1,5	4 ft. 11 in.	1,1	3 ft. 7 in.	-	-	3,5	7,7

CONDUCTOR SUPPORT TOOLS

CLEVIS AND TENON STICK

FUNCTION AND USE

The clevis and tenon stick is used : either alone or in pairs for replacing dead-end insulators or string insulators.
When it is equiped with apropriate attachement for performing various operations.
See clevis and tenon stick accessories in the table below.

FEATURES

The set consists of :
A clevis and tenon stick.
The desired lengths has to be defined from the table below.
Insulating tubes, fiberglass over the foam core, diameter 39 mm / 1 1/2".
Manufactured in accordance with ASTM F711 and IEC60855-1 standards.
Clevis and pin made of corrosion protected metal.
Steel bolt axle.

Catalog No.	Overall length (m)	Overall length (.ft and .in)	Length (m)	Length (.ft and .in)	Insulated length (m)	Insulated length (.ft and .in)	Tube Ø (mm)	Tube Ø (in)	Working load Limit (WLL) daN.	Working load Limit (WLL) lbs.	Approx. weight (kg)	Approx. weight (lbs)
CEI 60832-1												
LW04-18-39-059	0,59	1 ft 11 in	0,52	1 ft 8 in	0,3	0 ft 11 in	39	1 1/2	4500	9921	3	6,6
LW04-18-39-089	0,89	2 ft 11 in	0,85	2 ft 9 in	0,6	1 ft 11 in					3,33	7,3
LW04-18-39-109	1,09	3 ft 6 in	1,02	3 ft 4 in	0,8	2 ft 7 in					3,5	7,7
LW04-18-39-129	1,29	4 ft 2 in	1,22	4 ft 0 in	1	3 ft 3 in					3,6	7,9
LW04-18-39-159	1,59	5 ft 2 in	1,52	4 ft 11 in	1,3	4 ft 3 in					3,9	8,6
LW04-18-39-183	1,83	6 ft 0 in	1,76	5 ft 9 in	1,54	5 ft 0 in					4	8,8
LW04-18-39-189	1,89	6 ft 2 in	1,82	5 ft 11 in	1,06	3 ft 5 in					4,1	9,0
LW04-18-39-199	1,99	6 ft 6 in	1,92	6 ft 3 in	1,7	5 ft 6 in					4,2	9,3
LW04-18-39-209	2,09	6 ft 10 in	2,02	6 ft 7 in	1,8	5 ft 10 in					4,3	9,5
LW04-18-39-229	2,29	7 ft 6 in	2,22	7 ft 3 in	2	6 ft 6 in					4,4	9,7
LW04-18-39-259	2,59	8 ft 5 in	2,52	8 ft 3 in	2,3	7 ft 6 in					4,6	10,1
LW04-18-39-283	2,83	9 ft 3 in	2,76	9 ft 0 in	2,54	8 ft 4 in					4,7	10,4
LW04-18-39-299	2,99	9 ft 9 in	2,92	9 ft 6 in	2,7	8 ft 10 in					4,9	10,8
LW04-18-39-329	3,29	10 ft 9 in	3,22	10 ft 6 in	3	9 ft 10 in					5,2	11,5

- Its complementary accessories:

Clevis and tenon extension
Dimensions: 220 x 75 x 75 mm / 8 2/3" x 3" x 3"
Working Load Limit : 4500 daN / 9920 lbs.
Approximate weight: 1.7 kg / 3,75lbs

Catalog No.	**LW04-18-RAL**

Mixed adapter
Dimensions: 135 x 80 x 45 mm / 5 1/3" x 3 1/7" x1 7/9"
Working Load Limit : 2500 daN / 5511 lbs
Approximate weight: 1.1 kg / 2,43 lbs

Catalog No.	**LW04-18-PAMT**

Catalog No.		Length (jaw closed) (mm)	Length (jaw closed) (in)	Width (mm)	Width (in)	Thickness (mm)	Thickness (in)	Clamping capacity Ø (mm)	Clamping capacity Ø (inch)	Working Load Limit (daN)	Working Load Limit (lbs)	Approx. weight (kg)	Approx. weight (lbs)
Alloy tenon vice													
LW04-18-ETAU-250		250	9 5/6	100	4	50	2	11 to 30	.43" to .1.2"	1600	3527	1,4	3,1
LW04-18-ETAU-325		325	12 4/5	135	5 1/3	55	2 1/6	15 to 60	.5" to 2.36"	3000	6614	1,85	4,1
Alloy tenon roller													
LW04-18-ROUL-300		300	11 4/5	85	3 1/3	45	1 7/9	35	to max 1.36"	1600	992	1,4	3,1
LW04-18-ROUL-360		360	14 1/6	115	3 1/3	50	2	60	to max 2.36"	3000	992	1,5	3,3

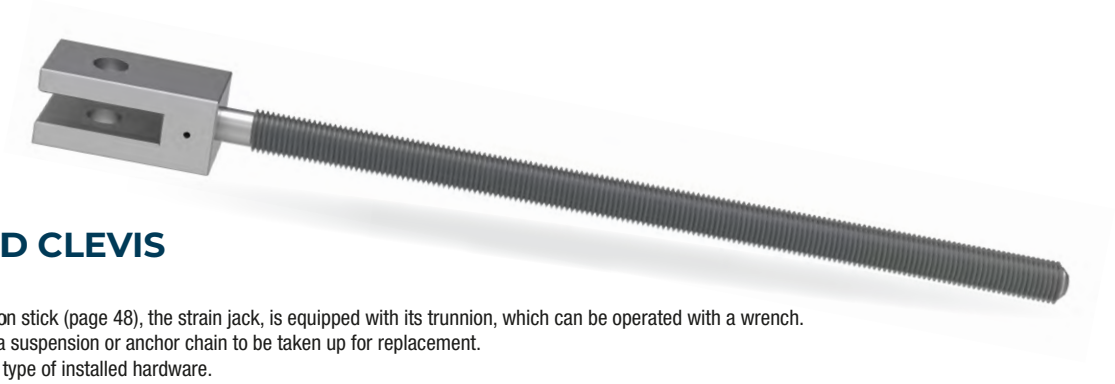

STRAIN JACK AND CLEVIS

FUNCTION AND USE

Attached to the end of a clevis and tenon stick (page 48), the strain jack, is equipped with its trunnion, which can be operated with a wrench.
This allows the mechanical tension of a suspension or anchor chain to be taken up for replacement.
The choice of trunnion depends on the type of installed hardware.

CARACTÉRISTIQUES

This set consists of the following elements:
A strain jack with a stainless-steel screw and a clevis equipped with a bolt, nut and safety pin.
The clevis screw is connected by a screw and pin.
Clevis opening: 18 mm / .71”
Clevis bolt: Ø 18 mm / .71”
Two types of trunnions available
A safety nut (only for trunnion WLL 5000 daN / 485 lbs) to take the load in case of failure.
Special feature: the 27 mm (1”) sleeve is extended to drive the ball thrust nut and the safety nut simultaneously.

Catalog No.	Model		Length (m)	Length (.ft and .in)	Maximum nut travel (m)	Maximum nut travel (.ft and .in)	Screw diameter (mm)	Screw diameter (in)	Approx. weight (kg)	Approx. weight (lbs)
	daN	lbs								
LW09-07-2500-50	2 500	5 512	0,50	1 ft. 7 in.	0,3	0 ft. 11 in.	19,4	0,76	1,7	3,7
LW09-07-2500-75			0,75	2 ft. 5 in.	0,55	1 ft. 9 in.			2,2	4,9
LW09-07-2500-100			1,00	3 ft. 3 in.	0,8	2 ft. 7 in.			2,6	5,7
LW09-07-2500-130			1,30	4 ft. 3 in.	1,1	3 ft. 7 in.			3,1	6,8
LW09-07-5000-50	5 000	11 023	0,50	1 ft. 7 in.	0,3	0 ft. 11 in.	20	0,79	2,5	5,5
LW09-07-5000-75			0,70	2 ft. 3 in.	0,5	1 ft. 7 in.			2,8	6,2
LW09-07-5000-100			1,00	3 ft. 3 in.	0,8	2 ft. 7 in.			3,4	7,5
LW09-07-5000-130			1,30	4 ft. 3 in.	1,1	3 ft. 7 in.			4,1	9,0
LW09-07-6000-67	6 000	13 228	0,67	2 ft. 2 in.	0,5	1 ft. 7 in.	24	0,94	3,5	7,7


Safety nut


Replacement nut for trunnions


Bolt


Model 1 Take-Up Trunnions


Model 2 Take-Up Trunnions

Catalog No.	Accessories
LW09-07-ES	Safety nut
LW09-07-ER	Replacement nut for trunnions
LW09-07-B	Bolt
LW09-07-BF	Model 1 Take-Up Trunnions
LW09-07-BR	Model 2 Take-Up Trunnions

SWIVEL RING AND CLEVIS

FUNCTION AND USE

Attached to the tenon end of a clevis and tenon stick (see page 48), the other end of which is equipped with different accessories (see page 48) makes it possible to create a strain stick, roller stick etc…

FEATURES

Anneau, émerillon, axe-boulon et chape, en alliage protégé contre la corrosion.

Catalog No.	Model	Length (mm)	Length (in)	Length d (mm)	Length d (in)	Working Load Limit in traction (daN)	Working Load Limit in traction (lbs)	Approx. weight (kg)	Approx. weight (lbs)
LW09-08-1	Model 1	225 x 75 x 60	8.86 x 2.95 x 2.36	165	6,5	2500	5512	1,9	4,2
LW09-08-2	Model 2	240 x 75 x 60	9.45 x 2.95 x 2.36	180	7	6000	13228	2,4	5,2

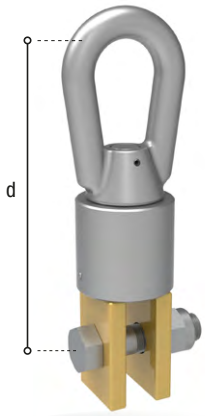

NOTES

COVER-UP EQUIPMENT

SCREEN FOR OVERHEAD-UNDERGROUND CONNECTION ASSEMBLY

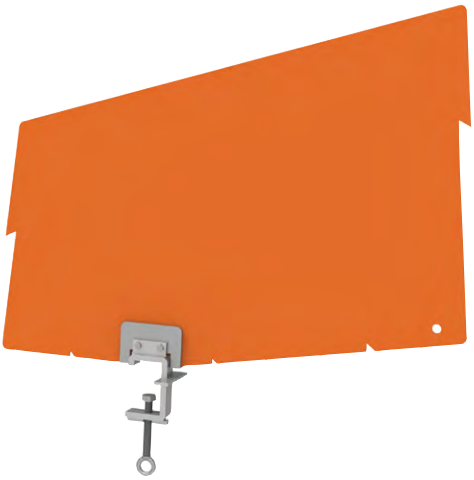

FUNCTION AND USE

Fixed to the cable head support bracket of an overhead-underground connection assembly, on either side of the middle phase, the screens for overhead-underground connection assemblies eliminate the risk of short circuits between phases, when operating jumper wires or switching devices under load.

FEATURES

Metal clamp.
Dimensions (L x W x H): 0.85 x 0.82 x 1.0 m / 2'9" x 2'8" x 3' 3"
Approximate weight: 2.5 kg / 5, 51 lbs

Réf.	**LW05-01**

INSULATING BLANKETS

FUNCTION AND USE

Under no circumstances are modifications authorized on insulating blankets.
Protect workers from accidental contact with energized components during line maintenance.
Flexible covers can be used with conductor covers (flexible or rigid) on deadends, apparatus, secondary racks, pole top pins and crossarms.
The slotted insulating blanket is specifically designed to cover the cross arms supporting any device for example a pin insulator.
Two or more sheets be joined by partial overlapping.
The sheets shall be secured together only by means of insulating blanket clamps or other accessories.

FEATURES

ASTM D-1048
Orange-coloured soft material, thickness 4 mm / $^{5}/_{32}$".
Class 4
Dimensions: 91 x 91 cm / 36" x 36"
Approximate weight: 3.7 kg / 8.2 lbs

Catalog No.	**LW05-03-1**	Flexible insulating blanket ; 6 eyelets
Catalog No.	**LW05-03-2**	Flexible slotted insulating blanket ; 28 eyelets

CLAMPS FOR INSULATING BLANKET

FUNCTION AND USE

The clamp is used to hold the Insulating blankets in place.

FEATURES : Plastic clamp. Metal spring protected against corrosion.

Catalog No.	Dimensions (L x W x H) (mm)	Dimensions (L x W x H) (.ft and .in)	Approx. weight (kg)	Approx. weight (lbs)
LW05-04-P	250 x 100 x 20	10" x 4" x 1'	0.1	0.2
LW05-04-M	490 x 200 x 40	1'7" x 7" x 1.5"	0.5	1.1
LW05-04-G	670 x 295 x 40	2'2" x 11" x 1.5"	0.66	1.4

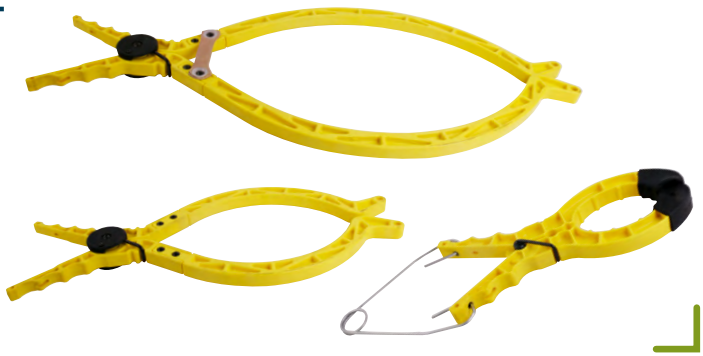

RIGID CONDUCTOR COVER

FUNCTION AND USE

Placed on a conductor, the conductor cover is used to allow the operator to reduce the distance between his area of movement and the part of the conductor covered by the rigid cover.
It can also be used to avoid accidental contact between phase-to-phase and phase-to-earth.
Insulation is largely the result of an air layer of a certain thickness by construction.
This cover can be used alone or in combination with other covers, examples :

- Other conductor covers
- Pin type insulator covers
- Tension string covers
- Dead end clamp covers

FEATURES

IEC 61229
Body made of orange-coloured synthetic material.
Two metal gripping lugs and rings for operating the locks.
Dimensions: 900 x 360 x 200 mm / 2' 9" x 1' 2" x 7"
Approximate weight: 3.4 kg / 7,5 lbs
Class 3

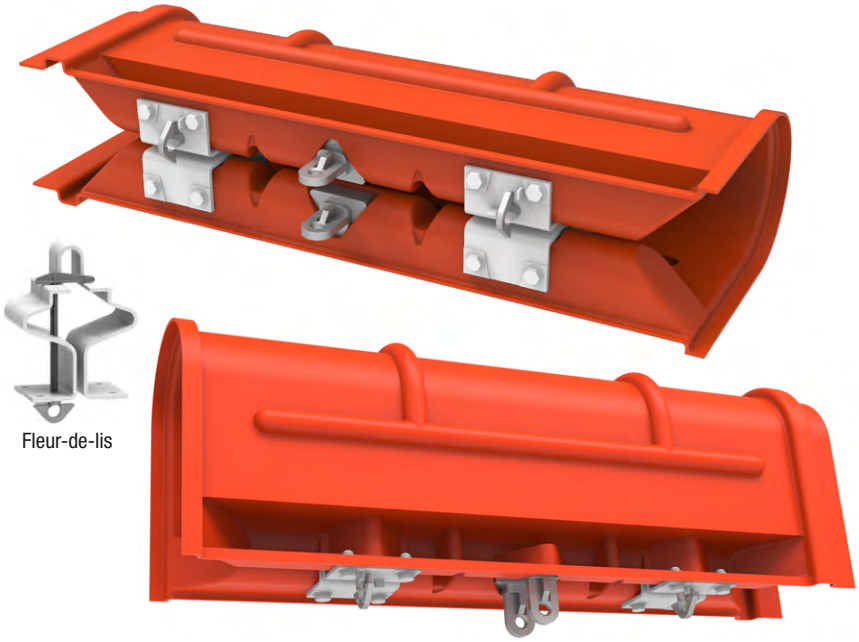

Fleur-de-lis

Catalog No.	**LW05-05**	Conductor cover
Catalog No.	**LW05-05-LYS**	Fleur-de-lis
Catalog No.	**LW05-05-FIXLYS**	Fixing kit for 1 fleur de lis

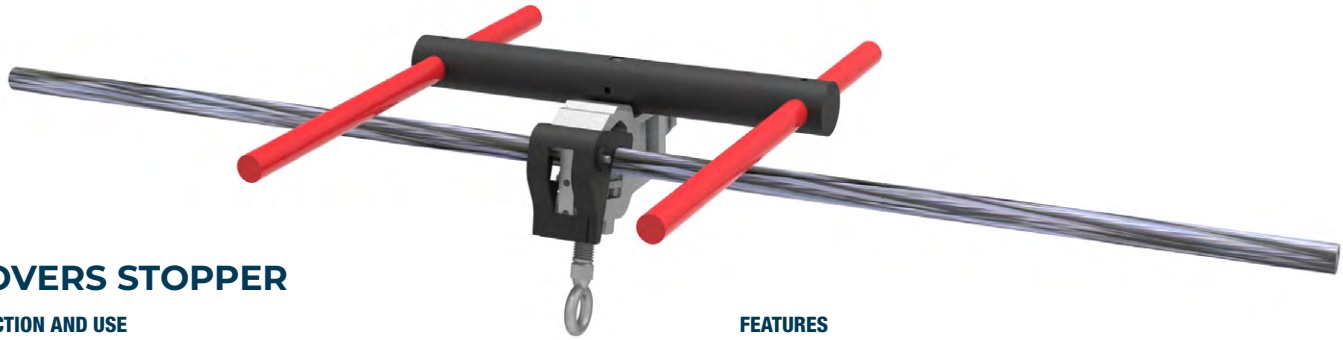

COVERS STOPPER

FUNCTION AND USE

Fitted with a ring connector, the cover stopper is used to avoid the covers installed on a graded line from slidding away from the designated area.
Stopper and connector are sold separately.

FEATURES

Two solid orange fibreglass rods: length 315 mm / 1', ø 15 mm / $^{9}/_{16}$"
One black solid fibreglass rod: length 270 mm / 10", ø 30 mm /1 $^{1}/_{6}$"
One square rod: length 50 mm / 2" ; 8 mm / $^{1}/_{3}$" sided square
Approximate weight: 0.5 kg / 1,1 lbs

Catalog No. Stopper	**LW05-06**

Catalog No. Connectors	**LW05-06-CON**

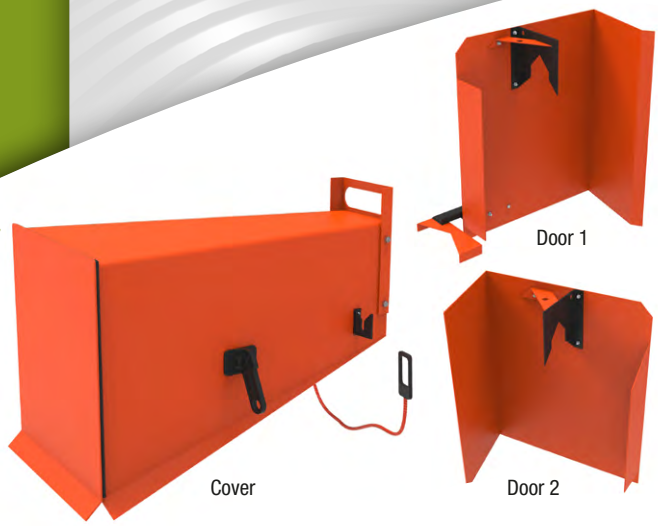

COVER FOR CABLE HEADS

FUNCTION AND USE

The cover for cable heads is used to allow the operator to reduce the distance between his working area and the fixed potential parts covered by the covers. It can also be used to avoid accidental contact between phase-to-phase and phase-to-earth.

FEATURES

IEC 61229
3-part assembly, made of orange-coloured synthetic material, equipped with black synthetic gripping and locking parts. Class 3

Catalog No.	LW05-07

	Dimensions (L x W x H) (mm)	Dimensions (L x W x H) (.ft and .in)	Approx. weight (kg)	Approx. weight (lbs)
Door No. 1 (with adjustable spacer)	880 x 470 x 850	2'10" x 1'6" x 2'9"	5,5	12,1
Door No. 2	740 x 420 x 850	2'5" x 1'4" x 2'9"	4,7	10,4
Cover	800 x 490 x 470	2'7" x 1'7" x 1'6"	5,1	11,2

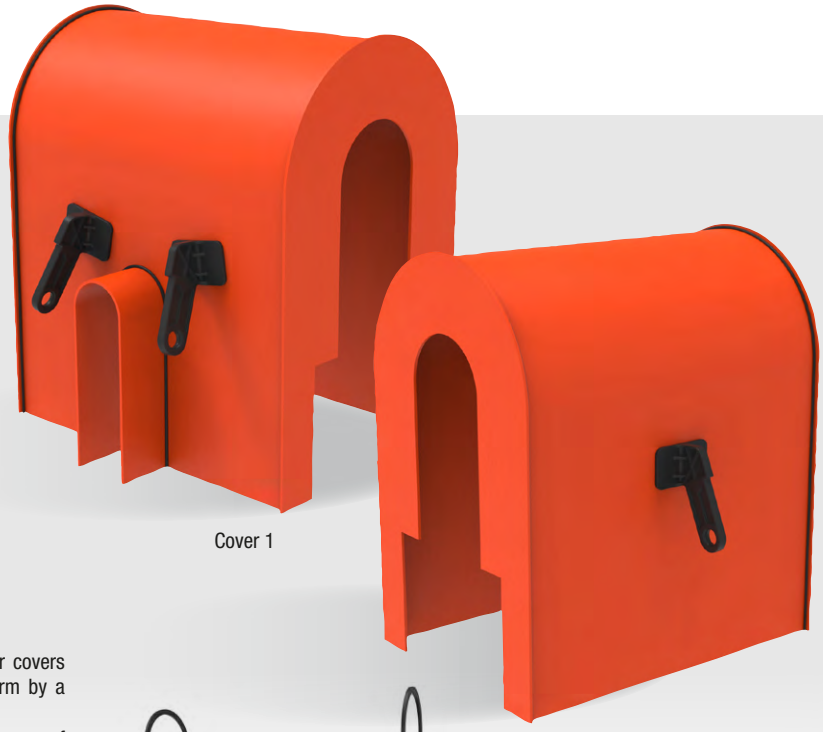
Cover 1

CONDUCTOR HOLDER COVER

FUNCTION AND USE

The conductor holder cover is used in association with conductor covers and accessory covers, whilst being maintained on an auxiliary arm by a conductor holder.
This allows the operator to reduce the distance between his area of movement and the parts protected by the cover.
It can also be used to avoid accidental contact between phase-to-phase and phase-to-earth.
Only the model 2 door can be used with the accessory covers.

FEATURES

IEC 61229
The body of the cover is made of orange plastic.
The doors are made of orange and black plastic.
The gripping tabs are made of black plastic.
Dimensions (L x W x H): 560 x 360 x 600 mm / 1'10" x 1'2" x 1'11"
Approximate weight: 7.5 kg / 16,5 lbs
Class 3

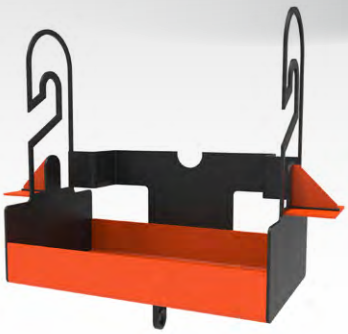
Door model 1


Door model 2

Catalog No.	**LW05-08**	Conductor holder cover
Catalog No.	**LW05-08-P1**	Door model 1
Catalog No.	**LW05-08-P2**	Door model 2 – To be used with accessory cover

DEADEND COVERS

FUNCTION AND USE

Placed on deadend insulators up to 200 mm (8») in diameter.
These covers allow the operator to reduce the distance between his working area and the parts protected by the cover.
For this purpose, the deadend cover is combined with a clamp cover.

- Clamp cover model 1 or 2 compatible with conductor cover and accessory cover.
- Clamp cover model 2 only compatible with accessory cover.

When the deadend cover is used in conjunction with the accessory cover, it is imperative that the clamp cover model 2 is used.
This cover cannot be fitted to deadends consisting of four insulators.
It can also be used to avoid accidental contact between phase-to-phase and phase-to-earth.

FEATURES

IEC 61229
Body made of orange-coloured synthetic material.
The deadends cover has metal gripping lugs to be used with a clampstick.
The clamp cover model 1 is fitted on the conductor cover before installation.
The clamp cover model 2 has a black plastic grip and locking system to be used with a clampstick.
Class 3

Clamp cover model 1

Clamp cover model 2

Deadend cover

Réf	Designation	Dimensions (L x W x H) (mm)	Dimensions (L x W x H) (.ft and .in)	Approx. weight (kg)	Approx. weight (lbs)
LW05-09	Deadend cover	700 x 270 x 670	2'3" x 10" x 2'2"	5,3	11,7
LW05-09-GP1	Clamp cover Model 1	430 x 230 x 430	1'4" x 9" x 1'4"	1,5	3,3
LW05-09-GP2	Clamp cover model 2	290 x 230 x 470	11" x 9" x 1'6"	1,2	2,6

LOCKABLE DEADEND COVER

FUNCTION AND USE

The deadend cover, consisting of a clamp cover, a bottom cover and a top cover, fits on deadend insulators up to 254 mm diameter (10").
Combined with one or more conductor covers or an accessory cover, it allows the operator to reduce the distance between his working area and the part of the conductor protected by the covers.
It can also be used to avoid accidental contact between phase-to-phase and phase-to-earth.

FEATURES

IEC 61229
Three-part assembly made of orange and black synthetic material.
Class 3.

Catalog No.	**LW05-10** (contains the items in the table below)

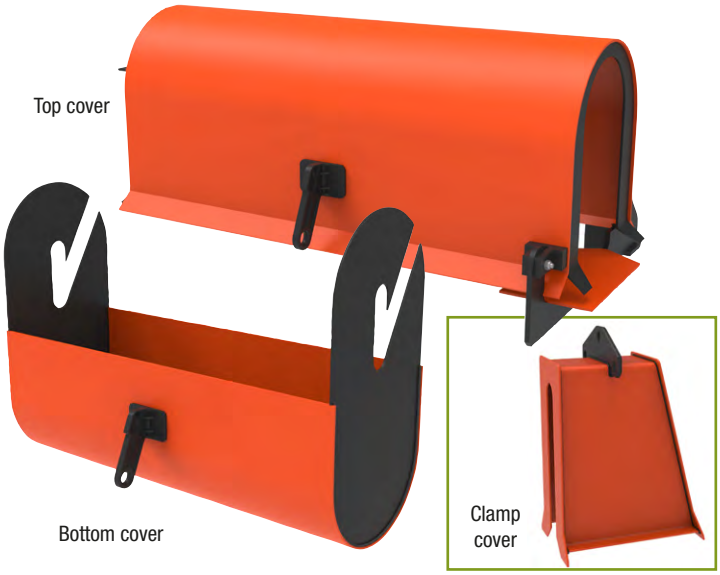

Catalog No.	Designation	Dimensions (L x W x H) (mm)	Dimensions (L x W x H) (.ft and .in)	Approx. weight (kg)	Approx. weight (lbs)
LW05-10-PP	Clamp cover	300 x 200 x 450	2'3" x 10" x 2'2"	1,5	3,3
LW05-10-PI	Bottom cover	850 x 450 x 570	1'4" x 9" x 1'4"	4	8,8
LW05-10-PC	Top cover	900 x 500 x 450	0.90 x 0.50 x 0.45	5	11,0

SUSPENSION STRING AND POLE HEAD COVER

FUNCTION AND USE

In combination with the conductor covers, the suspension string and pole head cover is used to allow :

- The operator to reduce the distance between his working area and the parts protected by the cover.
- It can also be used to avoid accidental contact between phase-to-phase and phase-to-earth.

In all cases, protruding network elements must be removed before the cover is fitted.
If the conductor is held by a conductor support stick or sticks, the suspension clamp must also be removed.

FEATURES

- Model 1: chimney integral with the cover for insulators with a diameter of 175 to 200 mm / 7" to 8".
- Model 2: removable chimney. 4 chimneys of different dimensions can be adapted to all MV insulators.

Door model 1

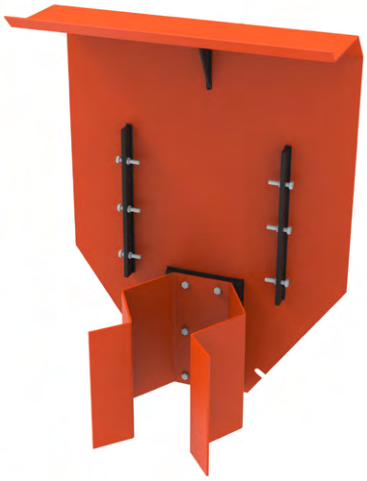

Main cover model 1

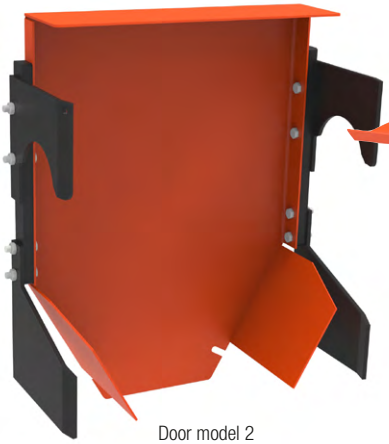

Door model 2

Main cover model 2

Type of removable chimney	A	B	C	D
Diameter of insulators (mm)	108	135	175 et 200	254
Diameter of insulators (in)	4 ¼	5 1/3	6 8/9 and 7 7/8	10

The chimeneys are fixed in place by 6 polyamide bolts and washers.
The door model 1 can only be used to protect the head of a conductor support stick.
The door model 2 can be used :

- Protect the head of a conductor support stick.
- To ensure the complete protection of a suspension string

Catalog No.	Designation	Dimensions (L x W x H) (mm)	Dimensions (L x W x H) (.ft and .in)	Approx. weight (kg)	Approx. weight (lbs)
LW05-11-1	Assembled: main cover model 1 combined with door model 1	800 x 320 x 560	2'7" x 1' x 1'10"	6,5	14,3
LW05-11-2	Assembled: main cover model 1 combined with door model 2 equipped with hooks and protective covers	900 x 320 x 600	2'11" x 1' x 1'11"	8	17,6

Accessories	
LW05-11-PR01	Main cover model 1
LW05-11-PR02	Main cover model 2
LW05-11-POR1	Door model 1
LW05-11-POR2	Door model 2
LW05-11-ACPRO	Hook for conductor
LW05-11-APPRO	Hook for conductor cover
LW05-11-CHE-A	Removable chimney A
LW05-11-CHE-B	Removable chimney B
LW05-11-CHE-C	Removable chimney C
LW05-11-CHE-D	Removable chimney D
LW05-11-APPOR	Hook for door model 2
LW05-11-CP2	Protection cover for door model 2

Cover bracket for main cover

Conductor's roll bar for main cover

Hook for door model 2

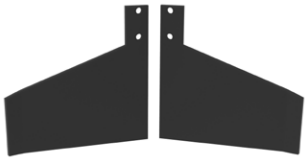

Alignment chain protection cover for door model 2

Chimney

Pin insulator cover

Pin insulator cover door

PIN INSULATOR COVER

FUNCTION AND USE

The pin insulator cover is placed over the insulator and is to be used with conductor covers.
This allows :

- The operator to reduce the distance between his working area and the parts protected by the cover.
- It can also be used to avoid accidental contact between phase-to-phase and phase-to-earth.

The insulation is largely the result of the distance between the conductor and the interior of the insulator.
Any protruding parts with a dimension greater than 40 mm (1 ½") prohibits its use.
For better slip resistance, it is preferable to fit the rigid insulator cover over the bosses of the conductor covers.
The door must be placed on the conductor before the pin insulator body is fitted.

FEATURES

IEC 61229
Body made of orange-coloured synthetic material.
Door, bolts and hooks of fixed or adjustable height, made of orange-coloured synthetic material. Black gripping tabs.
Minimum length 560 mm / 22"
Maximum length 810 mm / 32"
Width: 420 mm / 16 1/2" - Height: 450 mm / 17 ½"
Approximate weight body: 4.5 kg / 9,9 lbs
Door: 0.9 kg / 1,98 lbs
Class 3

Catalog No.	Designation
LW05-12	Complete cover
LW05-12-PRO	Pin insulator cover
LW05-12-POR	Pin insulator door

Joint

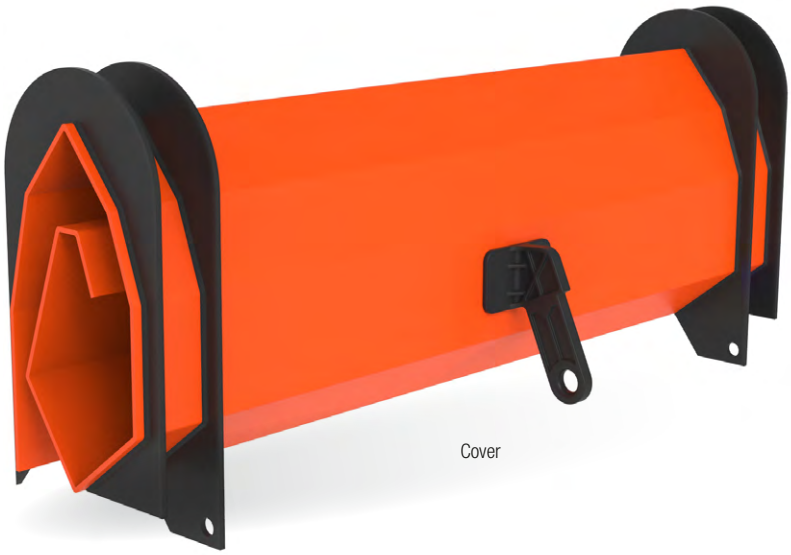

Cover

ACCESSORY COVER

FUNCTION AND USE

The accessory cover is placed on a conductor, on a network accessory, parallel groove clamp for example. The accessory cover is used :
So the operator to reduce the distance between his working area and the parts protected by the cover. It can also be used to avoid accidental contact between phase-to-phase and phase-to-earth.
The accessory cover can also be used to replace a conductor cover if it is compatible with the insulated covers that the operators intend to use.
The assembly of the covers in the different possible configurations is done by using the correct accessories.
Connection for accessory covers :
Placed between two accessory covers, the accessory cover joint holds the two accessory covers together, performing the same function as the accessory cover.

FEATURES

IEC 61229
2-part assembly made of orange material with black parts.
Class 3

Catalog No.	Designation	Dimensions (L x W x H) (mm)	Dimensions (L x W x H) (.ft and .in)	Approx. weight (kg)	Approx. weight (lbs)
LW05-14	Accessory protector	865 x 336 x 305	2'10" x 1'1" x 1'	4,6	10,1
LW05-14-J	Connection for accessory covers	210 x 330 x 550	8 ¼" x 13" x 1'9"	2,1	4,6

NOTES

JUMPERS & CONNECTING EQUIPMENTS

TEMPORARY LOCK-OUT TAG-OUT SWITCH

FUNCTION AND USE

The temporary lock-out tag-out switch is installed one per live conductor.
Combined with a temporary by-pass jumper cable equipped with eyescrew clamps, the temporary lock-out tag-out switch is used to open or close a circuit, particularly in the context of a lockout operation.
They can be opened or closed and locked in the required position from the ground by an operator, thanks to the insulated rods that are connected to the temporary switches.
Once the required maneuver has been carried out the insulated rods can then be placed and secured in the case which prohibits access to unauthorized personnel thanks to a padlock (sold separately).
The case is also use for transportation of the insulating rods.
The device should preferably be installed on conductors that remain live after switching in the context of a lockout situation, so that the temporary by-pass jumpers remains de-energized.
The temporary lock-out tag-out switch is only use on networks where the rated voltage equal or inferior to 24kV.

case

FEATURES

The temporary lock-out tag-out switch comprises of :
An opening and closing device (the switch).
Insulating tube coated in silicone.
Removable arc-chute chamber.
Protective cover for arc-chute chamber
Conductor clamp with eyescrew.
Knife and quick breaking device.
Two metal jumper hangers protected against corrosion.
Locking system in the «OPEN» or «CLOSED» position.

The insulated rods comprises of :
Insulated fiberglass rods Ø10mm / 2/5”
Length : 1 meters, 0.3 kg / 3 ft. 3 in. 0,66 lbs.
Lenght : 2 meters 0.4 kg / 6 ft. 6 in. 0,88 lbs
Lenght : 3 meters 0.5 kg /9 ft. 10 in 1,1 lbs
Male and Female bayonet coupling system made of corrosion-protected metal.

Transportation and lock-out tag-out case :
Case lockable by padlock.
Two textile straps with metal ratchet tensioners, protected against corrosion.
Dimensions: 950 x 243 x 300 mm / 37.4 x 9.6 x 11.8 in.
Approximate weight: 5 kg / 11 lbs

Temporary switch

Ring Ø 10 mm

Catalog No.	Designation
COMPLETE KIT: LW06-01	3-phase temporary lock-out tag-out switch supplied with Ø 10 mm (2/5”) rods: 12 of 3m (9’10”), 6 of 2m (6’6”) , 6 of 1m (3’3”) Locking case with straps
LW06-01-ISP	Temporary switch
LW06-01-J3	3m Ø 10 mm rod / 9 ft. 10 in Ø 2/5”
LW06-01-J2	2m Ø 10 mm rod / 6 ft. 6 in Ø 2/5”
LW06-01-J1	1m Ø 10 mm rod / 3 ft. 3 in Ø 2/5”
LW06-01-COF	Case
LW06-01-SAN	Strap for case
LW06-01-CC	Arc-chute chamber
LW06-01-ECC	Protective cover for arc-chute chamber
LW06-05	Lockable Conductor clamp with eyescrew

TEMPORARY LOAD DISCONNECT SWITCH

FUNCTION AND USE

The temporary load disconnect switch is installed one per live conductor and opened or closed simultaneously.
Combined with a temporary by-pass jumper cable equipped with eyescrew clamps, the temporary load disconnect switch is used to open or close energized or de-enegized circuits.
The temporary by-pass jumper cables and the temporary load disconnect switches should be removed after each manoeuver and not be left on the conductor.
The temporary load disconnect switch is only use on networks where the rated voltage equal or inferior to 24kV.

FEATURES

Insulating tubes, fiberglass over the foam core.
Manufactured in accordance with ASTM F711 and IEC60855-1 standards.
Removable arc-chute chamber.
Protective cover for arc-chute chamber
Conductor clamp with eyescrew.
Knife and quick breaking device.
Two metal jumper hangers protected against corrosion.
Weight: 2.8 kg / 6,17lbs

Catalog No.	Designation
LW06-02	Temporary load disconnect switch
LW06-01-CC	Arc-chute chamber
LW06-01-ECC	Protective cover for arc-chute chamber
LW06-05	Conductor clamp with eyescrew

JUMPER CABLE HOLDER

FUNCTION AND USE

Attached to a strain or roller link stick by means of a snap hook, the temporary by-pass jumper cable holder ensures that it will remain in the desired position.

FEATURES

Device made of non-conductive black synthetic material consisting of :
A cradle supporting the jumper cable.
Fitted with a hanging ring
The device is used to immobilise the shunt.
Dimensions: 335 x 100 x 310 mm / 3.2 x 3.9 x 12.2
Approximate weight: 0.6 kg / 1,32 lbs

Catalog No.	**LW06-03**

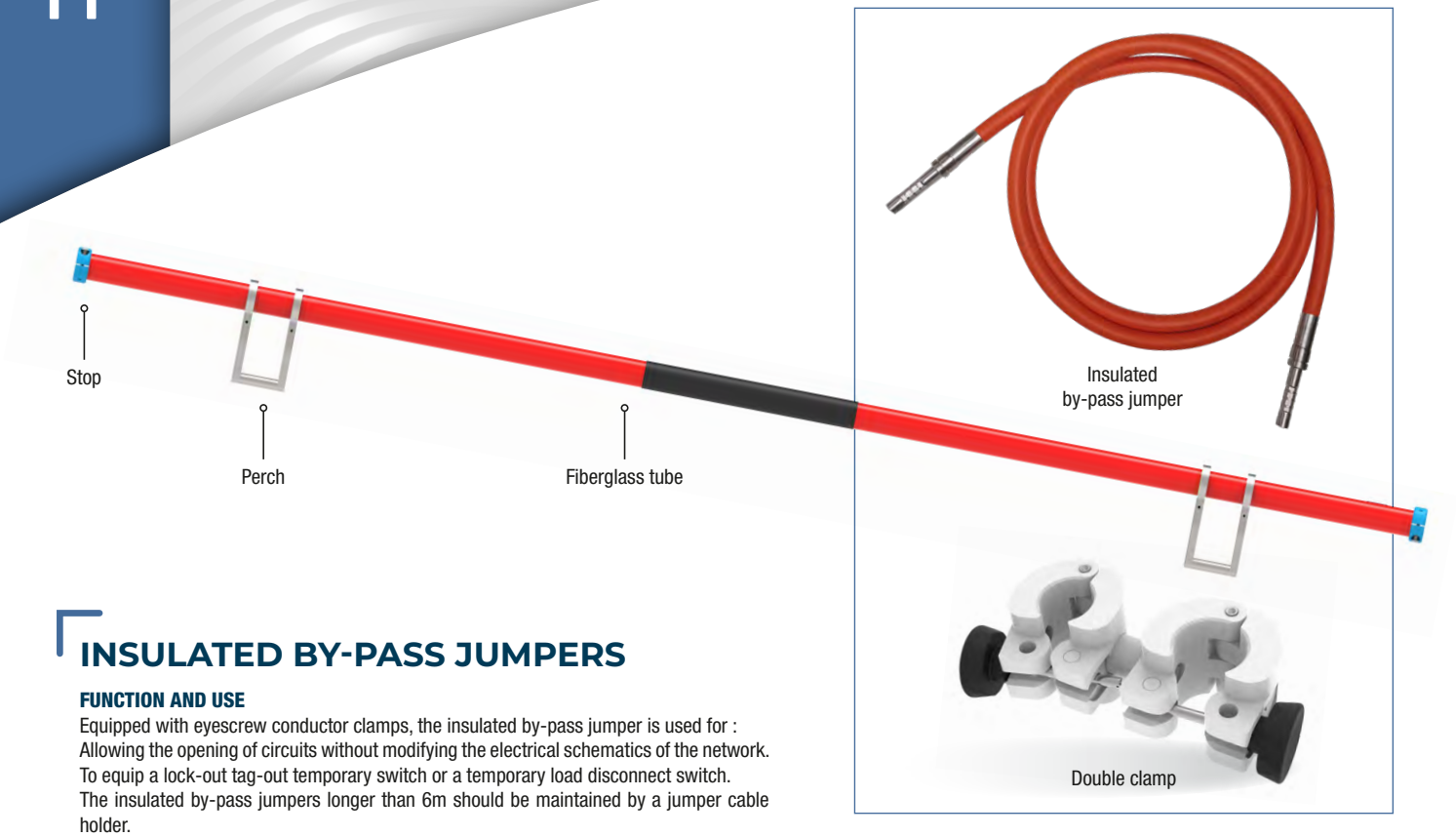

INSULATED BY-PASS JUMPERS

FUNCTION AND USE

Equipped with eyescrew conductor clamps, the insulated by-pass jumper is used for :
Allowing the opening of circuits without modifying the electrical schematics of the network.
To equip a lock-out tag-out temporary switch or a temporary load disconnect switch.
The insulated by-pass jumpers longer than 6m should be maintained by a jumper cable holder.
The Double clamp is used with a temporary auxiliary arm and the fiberglass tube which is designed to protect the insulated by-pass jumper from falling debris whilst maintenance is carried out on aerial switches.

FEATURES

Aluminium multi-strand 75 mm² cable equivalent to a 1/0 AWG cable.
Maximum current rating: 250 A
Black insulating jacket made of synthetic elastomer
Orange external protection made of synthetic elastomer: Ø 26 mm / 1”
Approximate linear mass: 0.6 kg/m / 1.329 lbs/ft

- Removable mechanical protection: Fiberglass tube
- Diameter: 51 mm / 2”
- Length: 2.50 m / 8,2’
- Linear mass: 1.5 kg/m / 3.3 lbs/ft
- Metal jumper hangers protected against corrosion.
- Plastic end-cap with jubilee clip.

Catalog No.	Insulated by-pass jumper with compression ferrule	Lenght (m)	Length (.ft and .in)	Connectors
LW06-04-C-250	Insulated by-pass jumper with compression ferrule	2,5	8 ft 2 in	LW06-05
LW06-04-C-350		3,5	11 ft 5 in	LW06-05
LW06-04-C-400		4	13 ft 1 in	LW06-05
LW06-04-C-600		6	19 ft 8 in	LW06-05
LW06-04-C-800		8	26 ft 2 in	LW06-05
LW06-04-C-1000		10	32 ft 9 in	LW06-05
LW06-04-C-1200		12	39 ft 4 in	LW06-05
LW06-04-C-1500		15	49 ft 2 in	LW06-05
	Insulated by-pass jumper with threaded ferrule			
LW06-04-F-250	Insulated by-pass jumper with threaded ferrule	2,5	8 ft 2 in	LW06-06
LW06-04-F-350		3,5	11 ft 5 in	LW06-06
LW06-04-F-400		4	13 ft 1 in	LW06-06
LW06-04-F-600		6	19 ft 8 in	LW06-06
LW06-04-F-800		8	26 ft 2 in	LW06-06
LW06-04-F-1000		10	32 ft 9 in	LW06-06
LW06-04-F-1200		12	39 ft 4 in	LW06-06
LW06-04-F-1500		15	49 ft 2 in	LW06-06

ACCESSORIES	
LW06-04-A	Plastic end-cap with jubilee clip
LW06-04-P	Metal jumper hangers
LW06-04-TPM	Mechanical protection fiberglass tube
LW06-04-MD	Double clamp

Note: Other lengths available on request (subject to volume)

LOCKABLE EYESCREW COMPRESSION CLAMP

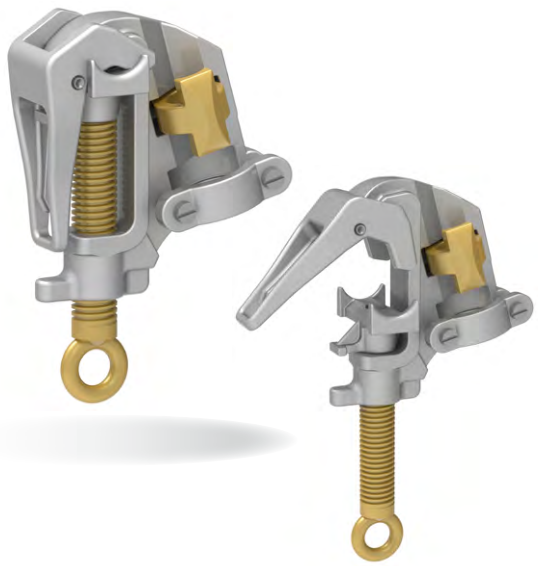

FUNCTION AND USE

The lockable eyescrew compression clamp is used on each extremity of the insulated by-pass jumpers.
The lockable system is to assure that after 2 turns of the eyescrew with a clampstick that the accidental removal of the lockable clamp will be avoided.

FEATURES

Equipment made mainly of aluminium (body, spout, jaws and collar), brass (ring spindle and bypass eye) and corrosion protected metal.
Dimensions: 173 mm x 117 mm x 66 mm / 6.81 x 4.61x 2.60 in.
Approximate weight: 0.80 kg / 1,76 lbs
Clamping capacity :
Ø 4 mm to Ø 25 mm, which corresponds to wires, cables or pins with a cross-section of 12.5 to 490 mm².
Ø .15" to 1" which corresponds to wires, cables or pins with a cross-section of #6 AWG to 1000 KCMIL cables.

Catalog No.	**LW06-05**

LOCKABLE EYESCREW THREADED CLAMP

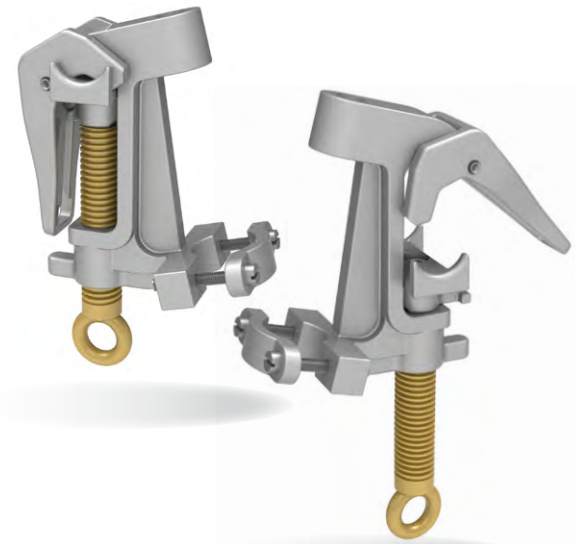

FUNCTION AND USE

The lockable eyescrew threaded clamp is used on each extremity of the insulated by-pass jumpers.
The lockable system is to assure that after 2 turns of the eyescrew with a clampstick that the accidental removal of the lockable clamp will be avoided.

FEATURES

Equipment made mainly of aluminium (body, spout, jaws and collar), brass (ring spindle and bypass eye) and corrosion protected metal.
Dimensions: 183 mm x 84 mm x 67 mm / 7.2 x 3.3 x 2.6 in
Approximate weight: 0.80 kg / 1,76 lbs
Ø 4 mm to Ø 25 mm, which corresponds to wires, cables or pins with a cross-section of 12.5 to 490 mm².
Ø .15" to 1" which corresponds to wires, cables or pins with a cross-section of #6 AWG to 1000 KCMILp cables.

Catalog No.	**LW06-06**

35KV JUMPER CLAMP

FUNCTION AND USE

Ergonomic grip thanks to its pentagonal shape that follows the natural shape of the hand.
The Jumper clamp is used for bypassing work areas without cutting off power during repair or maintenance.
Thanks to its innovative clamping compensation system, the clamp guarantees a a certified connection on the conductor which eliminates any risk of overheating.
No tools are required to fit the clamp, which can be tightened and untightened onto the conductor by hand using the transparent pentagonal handle.
The clamp is lightweight and impact resistant, and its transparent handle allows easy inspection of the ferrule and cable connectionp.

Medium head size	**LW06-07-477** (with clamp compensation)
	LW06-07-477-S (single without compensation)

FEATURES

ASTM F 2321
- 1 Transparent pentagonal handle 35kV for 2 jaw sizes: 477 MCM and 954MCM

Clamping range :
- 8 to 477 MCM (i.e. Ø4-18mm) for the small model
- 8 to 954 MCM (i.e. Ø4-32mm) for the large model

Max amperage: 400A
Size: 370 mm / 14.5 "
Approximate weight: 1.3 kg / 2,87 lbs
The body and jaw are made from a copper alloy.

Large head size	**LW06-07-954** (with clamp compensation)
	LW06-07-954-S (single without compensation)

Patent
No. 11749913

PIVOTING AUXILIARY ARM

FUNCTION AND USE

The pivoting auxiliary arm is used for :

- To support one, two or three conductors in conductor holders.
- To support one, two or three insulated by-pass jumpers.
- To support one, two or three insulated by-pass jumpers with their protective tubes if required.

Whatever the configuration used the Vertical Force of 120 daN (264 lbs) per conductor or jumper must be respected.
If it is not possible to respect the VF on one auxiliary arm a second auxiliary arm may be placed adjacent to the first auxiliary arm.
*VF = Vertical Force

FEATURES

Insulating tubes, fiberglass over the foam core. Manufactured in accordance with ASTM F711 and IEC60855-1. Pivoting saddle attachment and metal chain Keeper and pin. Metal axle with pin, for the assembly of the fixing saddle and the insulating tube. Rigid stirrup, recommended torque for tube protection is 17 N.m / 13 ft.lb (sold separately). Chain binder sold separately.

Catalog No.	Accessories
LW07-14-DS	Wing nut socket for torque wrench
LW07-16	Chain binder sold separately (Page 82)

Wing nut socket for torque wrench

Rigid stirrup

Catalog No.	Total length (m)	Total length (.ft and .in)	Total length of the part insulation (m)	Tube Ø (mm)	Tube Ø (in)	Approximate weight (kg)	Approx. weight (lbs)
LW06-08-64-260	2,60	8 ft 6 in	2,53	64	2 ½	9	19,8
LW06-08-64-115	1,15	3 ft 9 in	0,90			6	13,2

Accessory

Catalog No.	Designation	Dimensions (mm)	Dimensions (in)	Approx. weight (kg)	Approx. weight (lbs)
LW06-08-CEJF	Rigid stirrup	250 x 120 x 80	9.8 x 4.7 x 3.15	1,1	2,4

AUXILIARY ARM

FUNCTION AND USE

Attached to a concrete or wooden poles by means of a chain binder or a strap (Page 82), the auxiliary arm is used :

- To support one or more insulated by-pass jumpers with their protective tube held in place by the double clamps.
- To support a conductor in a conductor holder.

When the auxiliary arm is used on a square concrete pole, the saddle should be fitted with a wooden block (sold separetly).

FEATURES

Insulating tubes, fiberglass over the foam core, Manufactured in accordance with ASTM F711 and IEC60855-1
Saddle and chain, metal protected against corrosion.
Total length: 0.90 m / 2'11 "
Length of the insulating part: 0.75 m / 2'5 "
Working load limit (WLL): 120 daN / 264 lbs
Tube diameter: 64 mm / 2 1/2" - Approximate weight: 4.7 kg / 10,3 lbs
Accessory adaptable wooden block
Dimensions: 250 x 170 x 70 mm / 9.84 x 6.7 x 2.76 in.
Approximate weight: 1 kg / 2,2 lbs

Catalog No.	Designation
LW06-09	AUXILIARY ARM With chain binder
LW06-09-STP	AUXILIARY ARM With strap

Clamping block

Catalog No.	Accessories
LW07-16	Chain binder sold separately (Page 82)
LW06-09-CALE	Adaptable wooden block

ROUND EXTENSION ARM

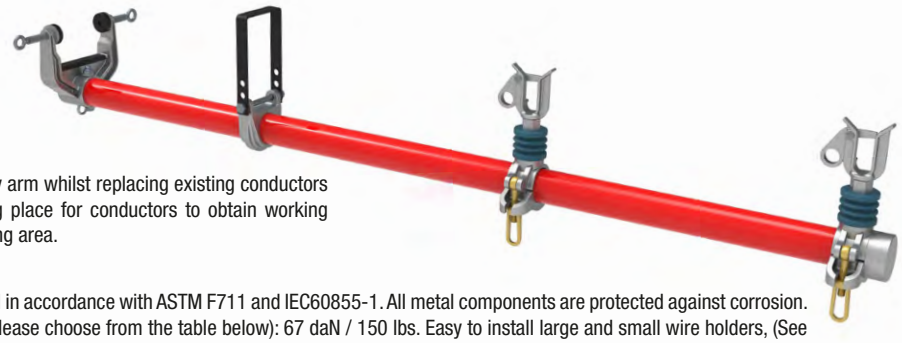

FUNCTION AND USE

The round Extension Arm is designed for use as a temporary arm whilst replacing existing conductors and insulators. It can also be used as a temporary resting place for conductors to obtain working clearance when the conductors impede the lineman's working area.

FEATURES

Insulating tubes, fiberglass over the foam core, Manufactured in accordance with ASTM F711 and IEC60855-1. All metal components are protected against corrosion. Working Load Limit (WLL) per wire holder (sold separately, please choose from the table below): 67 daN / 150 lbs. Easy to install large and small wire holders, (See below) that are adjustable and can be positioned where required on the insulated tube. Eye bolts are silicon bronze and are designed to prevent seizing. Ratings are 15KV without insulator and 34.5KV with insulator.

Catalog No.	Maximum cross arm size (mm)	Maximum cross arm size (in)	Total length (m)	Total length (.ft)	Tube Ø (mm)	Tube Ø (in)	Approx. weight (kg)	Approx. weight (lbs)
LW06-09-15-DXA	108 W x 172 H	4 ¼" W x 6 ¾" H	1.50	5	64	2 ½	4	9
LW06-09-18-DXA			1.80	6			4.5	10
LW06-09-15-TXA	133 W x 152 H	5 ¼" W x 6" H	1.50	5			4	9
LW06-09-18-TXA			1.80	6			4.5	10

WIRE HOLDERS FOR ROUND AUXILIARY AND EXTENSION ARMS

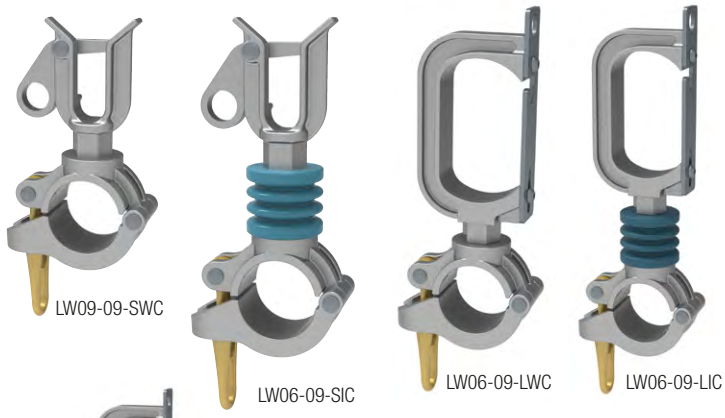

LW09-09-SWC LW06-09-SIC LW06-09-LWC LW06-09-LIC

FUNCTION AND USE

Attached to insulated tube (Ø64mm 2 ½ in) of an auxiliary or extension arm, the wire holder is used to temporarily hold a conductor. All auxiliary and extension arm small wire holders are equiped with a self-latching locking system. When placed in the wire holder, the conductor trips the safety latch, locking the conductor into the wire holder. Latch must be swivelled with an insulated live line stick to release the conductor. This does not apply to the large wire holders which are opened and closed, once the wire has been placed inside with the help of insulated live line stick.

FEATURES

Wire holder made in corrosion-protected metal :
Dimensions small wire holder:
120 mm x 80 mm x 23 mm / 4.7 in x 3.9 in x 0.9 in
Dimension large wire holder:
170 mm x 100 mm x 40 mm / 6.7 in x 3.9 in x 1.5 in

LW06-09-SWH LW06-09-LWH LW06-09-IWH LW06-09-64C

Catalog No.	Designation	Holding capacity (m)	Holding capacity (in)	Working load limit per wire holder (daN)	Working load limit per wire holder (lbs)	Approx. Weight (kg)	Approx. Weight (lbs)
WIRE HOLDERS FOR ROUND AUXILIARY AND EXSTENSION ARMS							
LW06-09-SWC	Small wire holder without insulator equiped with clamp	OD 27 mm	OD 0.0625	67	150	1	2.3
LW06-09-SIC	Small wire holder with insulator equiped with clamp					1.1	2.5
LW06-09-LWC	Large wire holder without insulator equiped with clamp	OD 66.6 mm	OD 2,625			1.2	2.8
LW06-09-LIC	Large wire holder with insulator equiped with clamp					1.7	3.8
LW06-09-SWH	Small wire holder	NA				0.2	0.4
LW06-09-LWH	Large wire holder					0.7	1.5
LW06-09-64C	Clamp Ø64mm / (2 ½")			NA		0.5	1.0
LW06-09-IWH	Insulator for all types of wire holders					0.5	1.0

WIRE HOLDER

FUNCTION AND USE

Attached to the tube of an auxiliary arm, the wire holder is used to temporarily hold a conductor.

FEATURES

Wire holder made in corrosion-protected metal :
- Fork with a locking latch,
- 64 mm diameter flat pole clamp with an anti-friction washer integrated in the wing nut and a stainless steel liner.

Dimensions: 350 mm x 200 mm x 100 mm / 13.8 in x 7.9 in x 3.9 in. Maximum diameter Ø 27 mm / 1".
Vertical Working Load Limit (WLL) : 250 daN / 551 lbs. Horizontal Working Load Limit (WLL) : 150 daN / 330 lbs.
It is recommended to check the tightening torque of the wingnut using a torque wrench and the wing nut socket.
Recommended tightening torque on the wing nut: 17 N.m / 12.5 lb.ft (wing nut socket sold separately)

Wing nut socket

Catalog No.	
LW08-38	

Catalog No.	Accessories
LW07-14-DS	Wing nut socket

ROLLER WIRE HOLDER

FUNCTION AND USE

The roller wire holder is used for holding a wire, to carry out work on the conductor.
It can be placed on a temporary auxilliary arm (page 64) equiped with a flat pole clamp (page 81) or on the insulated jib of a bucket truck equipped with the jib adapter and the clevis pin.
It is permitted to move a wire with this device, as long as the vertical and horizontal working load limits are respected.

FEATURES

Conductor support with metal rollers protected against corrosion.
Swivel cage with locking latch and bronze rollers.
Dimensions: 300 x 150 x 130 mm / 1.8 x 5.9 x 5.1 in
Roller spacing: 42 mm (1.65”) wide and 85 mm (3.35”) high.
Flat pole clamp Ø 64 mm (2 ½”) equiped with a wing nut and anti-friction washer.
Dimensions: 165 x 155 x 100 mm / 6.5 x 6.1 x 3.9 in
Vertical Working Load Limit (WLL) : 250 daN / 551 lbs.
Horizontal Working Load Limit (WLL) : 150 daN / 330 lbs .
It is recommended to check the tightening torque of the wingnut using a torque wrench and the wing nut socket.
Recommended tightening torque on the wing nut: 17 N.m / 12.5 lb.ft (wing nut socket sold separately)


LW08-39-MAN

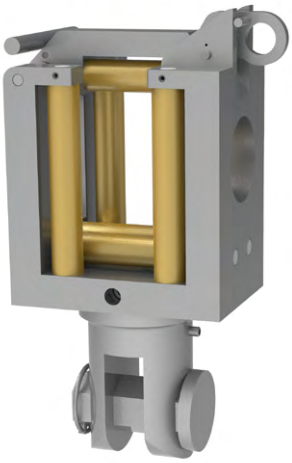
LW08-39-CHAPE

Jib adapter and clevis with pin compatible with France elevateur TBI 172 insulated bucket truck.
Jib adapters. For other models, please contact us.

Catalog No.	Designation
LW08-39-CAG	Roller wire holder
LW08-39-CHAPE	Roller wire holder with clevis end cap
LW08-39-MAN	Roller wire holder with Ø64 sleeve
LW08-39-AMC	Jib adapter
Catalog No.	Accessories
LW07-14-DS	Wing nut socket


Wing nut socket


Charging mat adapter

WIRE HOLDER FOR JIB

FUNCTION AND USE

Attached to the jib of an insulated bucket truck the wire holder is used for holding a wire, to carry out work on the conductor. It is permitted to move a wire with this device, as long as the vertical and horizontal working load limits are respected. Its shape allows the wire to be released by a person on the ground if necessary.

FEATURES

The wire holder for jib consists of :
- Clevis and pin and hexagonal pin
- Of a metal body
- Synthetic part to receive the conductor.

Dimensions: 310 x 160 x 80 mm / 12.2 x 6.3 x 3.1 in.
Approximate weight: 3kg / 6,6 lbs.
Vertical Working Load Limit (WLL) : 250 daN / 551 lbs.
Horizontal Working Load Limit (WLL) : 250 daN / 551 lbs.

Clevis with pin compatible with France elevateur TBI 172 insulated bucket truck.
Jib adapters. For other models, please contact us.

Catalog No.	**LW08-40**

U-SHAPED AUXILIARY ARMS AND EXTENSIONS

FUNCTION AND USE

The U-shaped auxiliary arms and extensions are designed for strength and durability. They can be used either as pole mounted auxiliary arms equiped with a chain binder or ratchet and strap binder, or as an extension on wooden or composite cross arms, equiped with metallic and rubber accessories so as not to damage synthetic cross arms.
The U-shaped extension is the most effective when pin insulators and attachment systems are required to be replaced.
The U-shaped auxiliary arms and extensions are used with fixed non movable insulated wire holders to obtain the level of security required.
The U-shaped auxiliary arm is rated up to 34.5kV and always contains an insulator incorporated in the wire holder irrelevant of the holding capacity.
The inspection of the strap and ratchet system should be carried out before each use, any signs of deterioration or wear and tear should result in the replacement of the strap.

FEATURES

Wire holders are made in corrosion-protected metal:
Dimensions small wire holder: 120 x 80 x 23 mm / 4.7 x 3.9 x 0.9 in
Dimensions large wire holder: 170 x 100 x 40 mm / 6.7 x 3.9 x 1.5 in
Vertical Working Load Limit (WLL) : 90 daN / 200lbs.

Catalog No.	Title	Total length (m)	Total length (in)	Working load limit per wire holder (daN)	Working load limit per wire holder (lbs)	Approx. weight (kg)	Approx. weight (in)
POLE MOUNTED U-SHAPED AUXILARY ARMS WITH CHAIN BINDER							
LW06-09-PUC1-SCUI	1 small conductor holder with insulator	1	34.75	90	200	7.7	17.0
LW06-09-PUC2-SCUI	2 small conductor holder with insulator	1.25	49.87			9.4	20.8
LW06-09-PUC1-LCUI	1 large conductor holder with insulator	1	34.75			7.7	17.0
LW06-09-PUC2-LCUI	2 large conductor holder with insulator	1.25	49.87			9.4	20.8
POLE MOUNTED U-SHAPED AUXILARY ARMS WITH STRAP AND RATCHET							
LW06-09-PUS1-SCUI	1 small conductor holder with insulator	1	34.75	90	200	6.5	14.3
LW06-09-PUS2-SCUI	2 small conductor holder with insulator	1.25	49.87			8.2	18.0
LW06-09-PUS1-LCUI	1 large conductor holder with insulator	1	34.75			6.5	14.3
LW06-09-PUS2-LCUI	2 large conductor holder with insulator	1.25	49.87			8.2	18.0
U-SHAPED EXTENSION ARMS WITH WIRE HOLDERS for cross arms 0.108m x 0.170m / 4.25" x 6.75"							
LW06-09-USC1-SCUI-HS	1 small wire holder with insulator	1.50	60.43	90	200	7	15.4
LW06-09-USC2-SCUI-HS	2 small wire holder with insulator					8.5	18.8
LW06-09-USC1-LCUI-HS	1 large wire holder with insulator					7	15.4
LW06-09-USC2-LCUI-HS	2 large wire holder with insulator					8.5	18.8
U-SHAPED EXTENSION ARMS WITH WIRE HOLDERS for cross arms 0.153m x 0.153m / 4" x 6"							
LW06-09-USC1-SCUI-HL	1 small wire holder with insulator	1.50	60.43	90	200	7	15.4
LW06-09-USC2-SCUI-HL	2 small wire holder with insulator					8.5	18.8
LW06-09-USC1-LCUI-HL	1 large wire holder with insulator					7	15.4
LW06-09-USC2-LCUI-HL	2 large wire holder with insulator					8.5	18.8
ACCESSORIES							
LW06-09-SCU	Small wire holder with C braket for U-shaped arms and extensions	Holding capacity OD 27mm	Holding capacity OD 0.0625in	NA	NA	1	2.3
LW06-09-LCU	Large wire holder with C braket for U-shaped arms and extensions	Holding capacity OD 66.6mm	Holding capacity OD 2,625in			1.1	2.5
LW06-09-HS	Hanging braket for cross arms small	Cross arm size 0.108 x 0.170	Cross arm size 4.25 x 6.75			0.2	0.5
LW06-09-HL	Hanging braket for cross arms large	Cross arm size 0.153 x 0.153	Cross arm size 6 x 6			0.2	0.5
LW06-09-RS44	Replacement strap and rachet	110	44			0.5	1.0
LW06-09-SRG	Replacement screws with rubber grippers (sold in pairs)	NA				0.2	0.5
LW06-09-IWH	Insulator for all types of wire holders	NA				0.5	1.0

SUSPENDED WIRE HOLDER

FUNCTION AND USE

Suspended from a chain of insulators by means of a ball-socket, the suspended wire holder provides temporary support for a conductor.

FEATURES

Suspended wire holder, made of corrosion-protected metal, consisting of : Locking cleat that ensures the wire is held securely. Clevis with pinned bolt.

Capacity: maximum 25 mm (1") conductor diameter.
Dimensions excluding cleat (length x diameter):
230 x 60 mm / 9" x 2,36"
Approximate weight: 1.5 kg / 3,31 lbs
Maximum vertical working load: 250 daN / 551,16 lbs

Catalog No.	LW08-37

CORNER CLEAT FOR AUXILIARY ARM

FUNCTION AND USE

The corner cleat for auxiliary arm allows the positioning of an auxiliary arm on the corner of a concrete pole equipped with an overhead switch:

- To hold insulated by-pass jumpers, when the cross-section of the pole does not allow the correct positioning of the conventionnal auxiliary arm.
- To maintain one or more insulated by-pass jumpers when servicing an overhead switch.

The angle cleat then allows the auxiliary arm to be offset from the manual control of the aerial switch.
The corner cleat can be mounted on the right or left side of the pole.
It must be attached to the pole by a chain binder, which is sold separately.

FEATURES

The corner cleat, made of corrosion-protected metal, includes :

- Cleat equipped with chain. Dimensions: 250 mm x 230 mm x 140 mm / 9.84 x 9 x 5.5 in.
- A flange equipped with two pins and screws to tighten the auxiliary arm onto the cleat. Dimensions: 210 mm x 130 mm x 75 mm / 8.3 x 5.1 x 2.95 in.

Approximate weight: 7 kg.

Catalog No.	LW06-10

Catalog No.	Accessories
LW07-16	Chain binder sold separately (Page 82)

MOUNTING BRACKET

FUNCTION AND USE

Fixed by means of a chain, on a support not a pylon. The fixing bracket for insulated by-pass jumpers is used, in association with two Ø64mm (2 1/2") pole clamps, which enables the holding in place of the auxiliary arm or a conductor support stick used solely to hold insulated by-pass jumpers. Chain binder sold separately.

FEATURES

Fittings, chain and nuts made of corrosion protected metal.
Dimensions (L x W x H): 400 x 270 x 150 mm / 15.75 x 10.63 x 5.9 in.
Approximate weight: 3 kg / 6,6 lbs

Catalog No.	LW06-11

Catalog No.	Accessories
LW07-13-64	Ø64 mm (2 ½") pole clamp sold separately (Page 80)
LW07-16	Chain binder sold separately (Page 82)

Model 2

Model 1

INSULATING HANGER

FUNCTION AND USE

Designed to provide the lineman safety when installing and removing energized jumpers.
Allows linemen greater control with all jumpering requirements.
It can be installed with all standard clampsticks or rubber gloves.

FEATURES

Insulating tubes, fiberglass over the foam core,
Manufactured in accordance with ASTM F711 and IEC60855-1
Model 1 is screwed onto the conductor from below,
Model 2 is screwed onto the conductor via eyescrew ring of the connector.

Catalog No.	Designation	Total length (m)	Total length (.ft and .in)	Insulating length (m)	Insulating length (in)	Clamping capacity (mm²)	Clamping capacity	Section of jumper hangers (mm²)	Diameter of jumper hangers (in)	Approx. weight (kg)	Approx. weight (lbs)
LW06-13-1	Model 1	0,55	1 ft 9 in	0,3	0 ft 11 in	12 to 150	6 to 300 KCMIL	70	½"	1	2,2
LW06-13-2	Model 2									1,1	2,4

Catalog No.	Accessories
LW06-13-BA	Removable pin - pin Ø 25mm (.98") - approx weight 0,5 kg (1,1 lbs)

ELECTRICAL SHUNT

FUNCTION AND USE

The apparatus is used to shunt an electrical circuit.
It can thus ensure the transit of current and withstand the effects of any short-circuit current.
When manipulating the electrical shunt all precautions must be taken.

FEATURES

The electrical shunt consists of :

- A flexible tinned copper braid consisting of one or more flat braids, possibly fitted with fixing straps or rings enabling the braid to slide over an insulating pole.

Permissible permanent current: 800 A
Maximum short-circuit current : 31.5 kA/1s
Cross-section: 200 mm², equivalent to 395 KCMIL
Maximum length: 6.5 m / 21 ft. 3in.
Approximate linear weight: 2 kg/m / 1,35 lb/ft

- At each end a cable connector type S1560

Catalog No.	Designation	Permanent current admissible (A)	Maximum intensity short circuit (kA/s)	Capacity of clamping (Ø mm)	Clamping capacity (Ø in.)	Tightening torque (N.m.)	Tightening torque (ft.lb.)	Dimensions (mm)	Dimensions (in.)	Approx. weight (kg)	Approx. weight (lbs)
LW06-15-C	Connector for cable	800	40	15 to 60	½" to 2 ½"	18	13.3	260 x 150 x 65	10.2 x 5.9 x 2.5	1,2	2,6
Longueur maximale											
LW06-15-T-100	1m / 3 ft. 3in.			15 to 60	½" to 2 ½"	18	13.3	-	-	2	4,4
LW06-15-T-200	2m / 6 ft. 6in.			15 to 60	½" to 2 ½"	18	13.3	-	-	4	8,8
LW06-15-T-400	4m / 13 ft. 1in.			15 to 60	½" to 2 ½"	18	13.3	-	-	8	17,6
LW06-15-T-650	6,5m / 21 ft. 3in.			15 to 60	½" to 2 ½"	18	13.3	-	-	13	28,7
LW06-15-T-XXX	Tailor-made			15 to 60	½" to 2 ½"	18	13.3	-	-	-	-

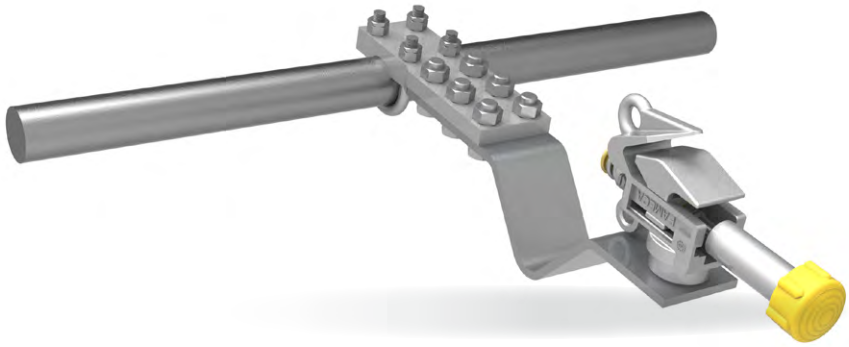

RIGID SHUNTING DEVICE

FUNCTION AND USE

In combination with a light alloy shunt tube of 40/50 mm (1,5" / 2") diameter and appropriate length, the rigid shunt device is used to ensure the flow of current, during live operation, from an apparatus such as a disconnector or circuit breaker with a nominal voltage of 63 or 90 kV.
In addition to its function as an electrical shunt, the rigid shunting device ensures that the connections are mechanically held in place when they are disconnected from their terminal blocks.

FEATURES

- Light alloy connectors :

Clamping capacity (diameter): 15 to 60 mm (1/2" to 2 ½")
Connectors are tightened (8 mm per turn) with an extension pole adapter.
- Connection plate with expansion block and connection area for 40/50mm (1,5"/ 2") pipe, made of light alloy.

Catalog No.	LW06-17

For the assembly :

- Permissible permanent current: 800 A.
- Maximum short-circuit current : 30,000 A for 1 s
- Maximum length: 2.50 m / 8 ft. 2 in.
- Approximate weight: 10 kg / 22,05 lbs

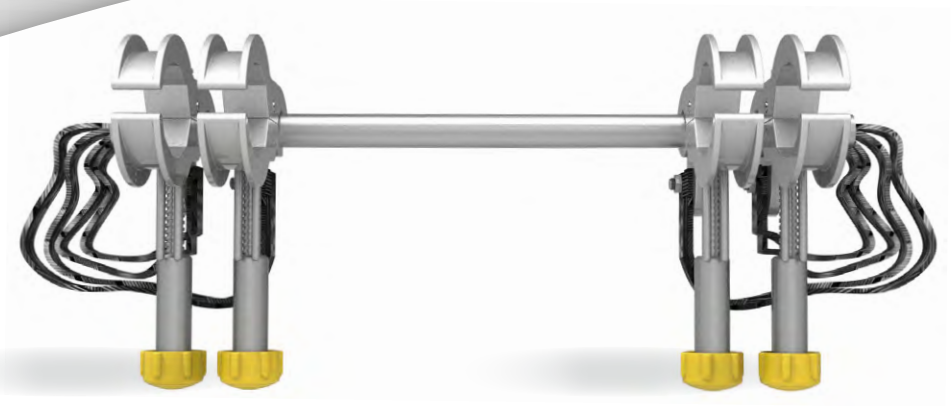

SHUNTING DEVICE

FUNCTION AND USE

The shunting device is used to ensure the flow of current in a busbar, e.g. at a faulty connection.
If this tool is to be used for a long time, the tightness of the connectors must be checked regularly.
It is recalled that both connectors on one side should be connected first, before connecting those on the other side.
Choose the desired connectors from the table below

Catalog No.	With connector	Connector reference
LW06-18-1560*	15/60 cable connector	LW06-22-15/60*
LW06-18-140*	40/120 connector	LW06-22-40/120*

FEATURES

Flexible connection braid, tinned copper:

- Cross-section 200 mm² / 400 KCMIL : 2 x 100 mm² or 4 x 50 mm² / 2 x 200 KCMIL or 4 x 100 KCMIL
- Cross-section 400 mm² / 790 KCMIL : 2 x 2 x 100 mm² distributed over 2 sets of 2 connectors / 2 x 2 x 200 KCMIL distributed over 2 sets of 2 connectors
- Maximum length of a braid: 1.20 m / 3 ft. 11in.
- Approximate weight per metre: 2 kg (4,4 lbs) for a 200 mm² braid.

This braid is threaded through a holding tube, made of aluminum alloy, with locking bolts at each end to prevent the braid from slipping.
Tube : Ø 50 mm / 2" .
For the assembly: - Permissible permanent current: 800 A
- Maximum short-circuit current : 10 000A for 1 second.

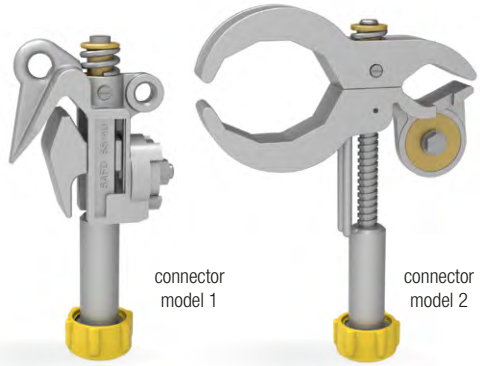

The connectors are equipped with different ferrules depending on the shunting device
* Type of stick interface: HEF / AN

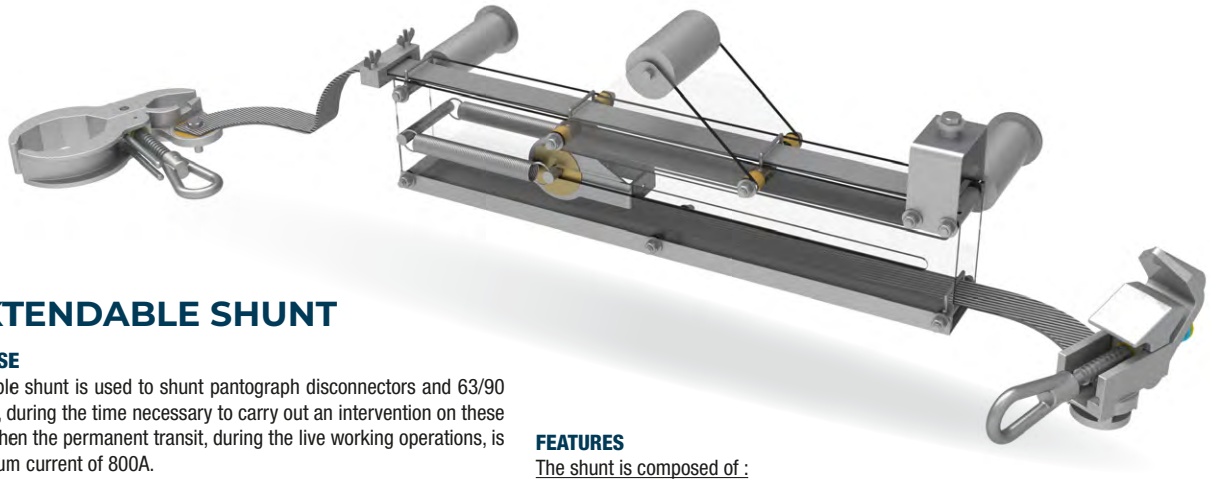

800A EXTENDABLE SHUNT

FUNCTION AND USE

The 800A extendable shunt is used to shunt pantograph disconnectors and 63/90 kV circuit breakers, during the time necessary to carry out an intervention on these switchgears and when the permanent transit, during the live working operations, is limited to a maximum current of 800A.

Catalog No.	With connector	Connector reference
LW06-19-1560*	15/60 cable connector	LW06-22-15/60*
LW06-19-140*	40/120 connector	LW06-22-40/120*

The connectors are equipped with different stick interfaces depending on the shunting device.
* Type of stick interface : HEF / AN

FEATURES

The shunt is composed of :

- Two 100mm² (200 KCMIL) flexible tinned copper braids with a maximum extensible length of 2.30m (7 ft. 6 in.). These are guided by means of spacers and crosspieces inside 2 flanges.
- A spring-loaded retention device.
- 2 hangers Ø45mm / 1,8" for positioning the braid end connectors.

Dimensions: 750 mm x 300 mm x 250 mm / 29.5 x 11.8 x 9.8
Approximate weight: 14 kg / 30,9 lbs
Continuous current rating: 800A

VACUUM SWITCHING DEVICE FOR OPENING AND CLOSING 63 KV AND 90 KV CIRCUITS

(WITH A NOMINAL VOLTAGE OF 63 KV OR 90 KV DEPENDING ON THE INSTALLATION)

FONCTION ET UTILISATION

The vacuum switching device (V.S.D.) for opening and closing 63 kV and 90 kV circuits is used to connect or disconnect permanent jumpers of a 63 kV or 90 kV live installation, with no load.
The length should be equivalent or compatible with the opening and closing capacity of the device.

FEATURES

The opening device comprises :

- Two Insulating tubes Ø32mm, fiberglass over the foam core, Manufactured in accordance with ASTM F711 and IEC60855-1. The tubes are held parallel by synthetic spacers.

Length of tubes: 63 kV: 0.60 m / 2 ft. - 90 kV: 0.80 m / 2 ft. 7in.
The transformation from 63 and 90 kV is done by replacing the tubes.

- A corrosion-protected metal suspension lock, suitable for use with conductors up to 1144 mm² / 2254 KCMIL or with tubes up to Ø45 mm / 1,8".
- An arc-limiting resistor.
- A corrosion-protected metal rupture device comprising :
  - A flexible cable (consumable) with a cross section of 4mm2 (Ref.: LW06-20-CS),
  - Two anchor points for this cable,
  - An opening spring in a protective tube made of synthetic material.
  - A hand-operated winch,
  - A cable cutter that can be operated with a nylon wire.
- A parking bar.
- A connection device, made of metal protected against corrosion, comprising of two connectors, one adapted to the section of the conductor and the other to the diameter of the parking bar. These are connected together by a flexible cable of less than 1 m in length and 4mm2 in section.

Dimensions at 63 kV: 190 x 40 x 55 mm / 7.5 x 1.6 x 2.2 in.
Dimensions at 90 kV: 210 x 40 x 55 mm / 8.27 x 1.57 x 2.17 in.
Approximate weight: 12.5 kg / 27,5 lbs

Catalog No.	LW06-20

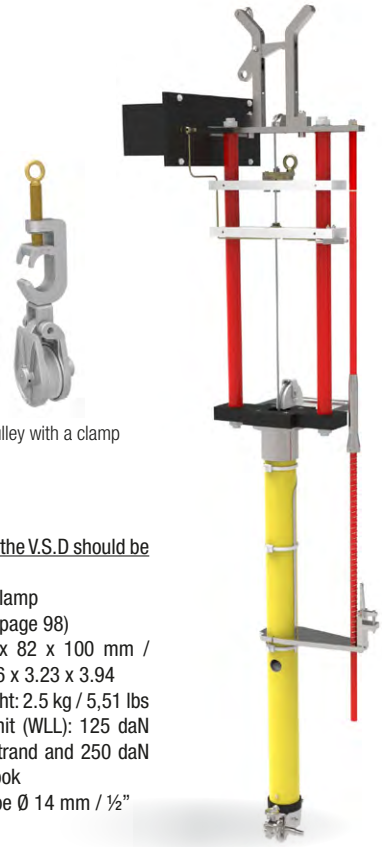

A pulley with a clamp

The installation of the V.S.D should be done with :

- A pulley with a clamp (LW08-30-PEF) (page 98)

Dimensions: 375 x 82 x 100 mm / 14.76 x 3.23 x 3.94
Approximate weight: 2.5 kg / 5,51 lbs
Working Load Limit (WLL): 125 daN (275 lbs) at the strand and 250 daN (551 lbs) at the hook

- An insulating rope Ø 14 mm / ½" (Page 85)

Catalog No.	Accessories
LW08-30-PEF	Pulley with clamp
LW08-04-14-Longueur	Insulating rope Ø 14mm (½")

ARC GUIDE 63/400KV

FUNCTION AND USE

The Arc Guide is used to connect or disconnect a part of a 63/400 kV installation under no-load voltage.

FEATURES

- Three Insulating tubes Ø32mm (1 ¼"), fiberglass over the foam core, Manufactured in accordance with ASTM F711 and IEC60855-1. Fixed at each end.
- 2 electrodes sliding along the triangular structure, and each connected to a reel by a 4mm² cable (Catalog No.: LW06-20-CS).
- 1 opening device controlled from the ground by an insulating wire.
- 1 closing device controlled from the ground by an insulating wire.
- 1 bottom electrode locking device (anti-rebound).
- 4 connecting brackets (2 on the lower spacer and 2 on the upper spacer).
- 1 lifting eye located on the top brace.
- 3 holding rings.

Catalog No.	LW06-21

Accessories :

- Hanging fork

Overall height 2550 mm / 8 ft.4 in.
Width < 650 mm / < 2ft.
Approximate weight 30 kg / 66 lbs

The installation of the arc guide should be done with :

- A pulley with a clamp (LW08-30-PEF) (Page 98)
  Dimensions 375 x 82 x 100 mm / 14.76 x 3.23 x 3.94
  Approximate weight: 2.5 kg / 5,5 lbs
  Working Load Limit (WLL): 125 daN (275 lbs) at the strand and 250 daN (551 lbs) at the hook
- An insulating rope Ø 14 mm / ½" (Page 85)

Catalog No.	Accessories
LW08-30-PEF	Pulley with clamp
LW08-04-14-Longueur	Insulating rope Ø 14mm (½")

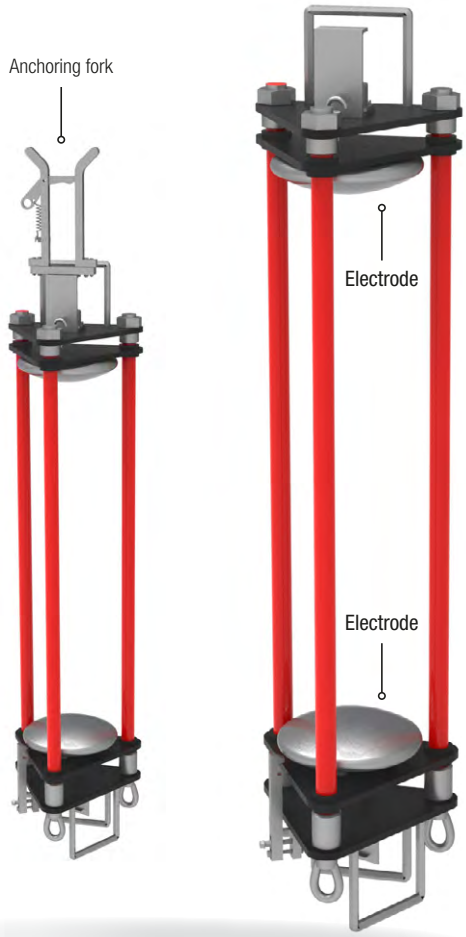

SHUNTING CIRCUIT

FUNCTION AND USE

During maintenance work on the electricity transmission networks, the installation of a shunt circuit ensures continuity of power supply. A shunt circuit is generally made up of a shunt tube (not supplied) equipped with fittings at its ends, shunt braids and shunt connectors. The different elements proposed here allow to adapt to the different configurations (dimensions, capacities...) of the electricity transmission network. Material approved for the electricity transmission network may also be used in the shunt circuit.


20/120 connector


Connector 120/200


40/120 connector


15/60 connector for horizontal or vertical cable


Connector for vertical connection


15/60 connector for cable (fixed range)


Connector 15/60 for cable

The shunt circuit consists of the following components:

CONNECTORS

Catalog No.	Designation	Clamping capacity (mm)	Clamping capacity (in)	Tightening torque (N.m.)	Tightening torque (ft.lb.)	Continuous current (A)	Maximum short-circuit current (kA/1s)	Dimensions (mm)	Dimensions (in)	Approx. weight (kg)	Approx. weight (lbs)
LW06-22-20/120*	20/120 connector	20 to 120	.78" to 4.72"	18	13,3	1600	40	320 x 190 x 50	12.6 x 7.5 x 2	1,8	4,0
LW06-22-120/200*	Connector 120/200	120 to 200	4.72" to 7.87"			1600	40	400 x 200 x 65	15.75 x 7.9 x 2.6	3,2	7,1
LW06-22-40/120*	40/120 connector	40 to 80 and 90 to120	1.57" to 3.15" and 3.54" to 4.72"			800	31,5	300 x 230 x 40	11.8 x 9 x 1.6	1,6	3,5
LW06-22-15/60*	Connector 15/60 for cable	15 to 60	.6" to 2.36"			800	40	260 x 150 x 65	10.2 x 5.9 x 2.6	1,2	2,6
LW06-22-15/60P*	Connector 15/60 for cable (fixed range)	15 to 60	.6" to 2.36"			1600	40	260 x220 x 120	10.2 x 8.6 x 4.7	1,8	4,0
LW06-22-CMV*	Connector to vertical jaws	19 to 40	.75" to 1.57"			800	31,5	250 x 200 x 160	9.8 x 7.9 x 6.3	1,6	3,5
LW06-22-15/60HV*	15/60 connector for horizontal cable or vertical	15 to 60	.6" to 2.36"			800	40	400 x 180 x 130	15.7 x 7.1 x 5.1	2,4	5,3

The connectors are equipped with different ferrules depending on the shunting device.
* Type of stick interface: HEF / AB / AN


Braids

BRAIDS

Catalog No.	Designation	Section (mm²)	Section	Continuous current (A)	Maximum short-circuit current (kA/1s)	Approx. weight (kg)	Approx. weight (lbs)	Hole spacing (mm)	Hole spacing (in.)	Hole Ø (mm)	Hole Ø (in.)	Couple tightening torque on range (N.m.)	Couple tightening torque on range (ft.lb.)
LW06-22-T1-800	1800 mm model	100	200 KCMIL	400	20	1	2,2	45	1,77"	16	.63"	45	33,18
LW06-22-T1-1200	Model 1 1200 mm			400	20	1,5	3,3						
LW06-22-T2-800	Model 2 800 mm	300	590 KCMIL	1200	40	3,3	7,3						
LW06-22-T2-1200	Model 2 1200 mm			1200	40	5	3,3						


Swivel range 800 A


Swivel range 1600 A


Perch for 120/20 connector


Perch for vertical connector 120/20


Bayonet adapter

BEACHES AND ACCESSORIES

Catalog No.	Designation	Permanent current (A)	Maximum short-circuit current (kA/1s)
LW06-22-P0800	Swivel range 800 A	800	40
LW06-22-P01600	Swivel range 1600 A	1600	40
LW06-22-P120/200	Perch for 120/200 connector	Does not allow for current flow	
LW06-22-PV	Perch for vertical connector 120/200	Does not allow for current flow	
LW06-22-AB	Bayonet adapter		
LW06-22-GP	Protective sheath		

PORTABLE LOAD BREAK TOOL

FUNCTION AND USE

The portable load break tool opens circuits under load when used with circuit breakers, disconnect switches, capacitor banks, fuse limiters and power fuses.

FEATURES

- Easy reset for glove operation without risk of tearing
- Lightweight design
- Secured transport in a hard plastic padded «Peli type» carrying case.
- Operation counter
- No exposed springs
- Two models for two voltage levels
- Suitable for all types of universal poles.

Catalog No.	Description	Maximum voltage of use (kV)	Rated currentof interruption (A)	Maximum current of interruption (A)	Weight (kg)	Dimensions (mm) Closed and Open	Dimensions (in.) Closed and Open
LBT1427C	Load Break tool 27 kV / 900 A	27	600	900	2,1	330 x 115 x 210 500 x 115 x 210	13”x4.5”x 8.26” 20.8”x4.5”x8.26”
LBT2538C	Load Break tool 38 kV / 900 A	38	600	900	2,3	406 x 115 x 210 605 x 115 x 210	16”x4.5”x 8.26” 23.8”x4.5”x8.26”

NOTES

SADDLES AND ACCESSORIES

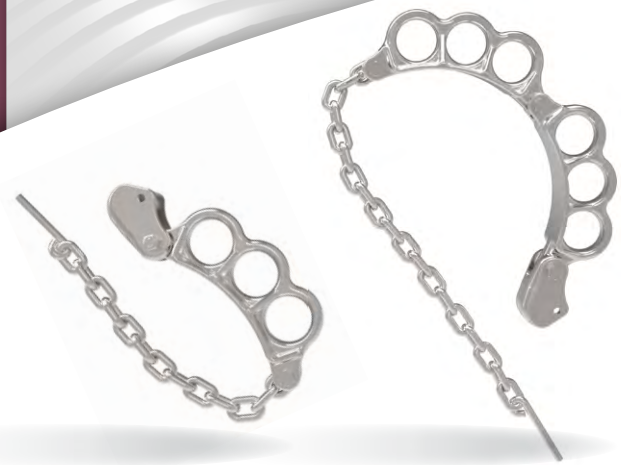

RING SADDLE

FUNCTION AND USE

Attached to a wooden or concrete pole and fitted with a chain binder (sold separately).
Fixed to the pole and equiped with the service rope gin (sold separately), it can serves as an anchor point for the service rope.
Can also be used as a stick holder equiped with the stick holder accesory (sold separately).
Service rope gin (ref LW08-17 page 90)
Stick holder (ref LW07-03 see below)
Chain Binder (ref LW07-16 page 82)

FEATURES

IEC 61236
Metal tool protected against corrosion.
Chain length: 900 mm / 2 ft. 11 in.

Catalog No.	Accessories
LW07-16	Chain binder sold separately (Page 82)

Catalog No.	Designation	Working Load Limit (WLL) on a ring (daN)	Working Load Limit (WLL) on a ring (lbs)	Working Load Limit (WLL) distributed over several rings (daN)	Working Load Limit (WLL) distributed over several rings (lbs)	Approx. weight (kg)	Approx. weight (lbs)
LW07-01-6A	Model with 6 rings	300	661	400	882	4,2	9,3
LW07-01-3A	Model with 3 rings	300	661	400	882	3,7	8,2

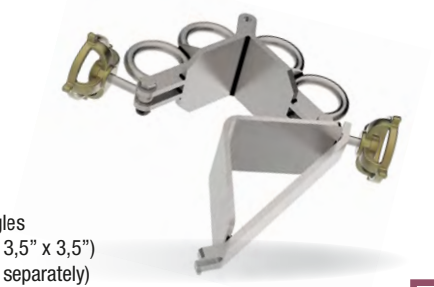

RING SADDLE FOR PYLONS

FUNCTION AND USE

Attached to a pylon with upright angles
no exceeding than 90mm x 90mm (3,5” x 3,5”)
and fitted with a chain binder. (sold separately)
Fixed to the pylon and equiped with the service rope gin (sold separately), it can serve as an anchor point for the service rope.
Can also be used as a stick holder equiped with the stick holder accesory (sold separately).

FEATURES

IEC 61236
Metal protected against corrosion.
Dimensions (L x W x H): 290 x 100 x 100 mm / 11.4 in x 3.9 x 3.9
Approximate weight: 4.4 kg / 9,7 lbs
Maximum working load: 450 daN / 990 lbs

Catalog No.	LW07-02

STICK HOLDER

FUNCTION AND USE

Attached to a pole ring saddle, the stick holder is used to hang poles or other equipments, waiting to be used.

FEATURES

Metal protected against corrosion.
Dimensions (L x W x H): 350 x 165 x 80 mm / 13.7 x 6.5 x 3.1
Approximate weight: 0.7 kg / 1,5 lbs

Catalog No.	LW07-03

LEVER SADDLE

FUNCTION AND USE

Attached to a wooden or concrete pole, using a chain binder(sold separetly), the lever saddle is used to guide the movement and fix the position of one or two conductor support sticks in a triangulation.
The vertical movement of the lever saddle is achieved by means of a rope block.
The use of the eye shackle instead of the single shackle makes it easier to hook the hoist. Sold with the lever saddle, but can be purchased separately.

FEATURES

IEC 61236
Metal protected against corrosion. .
Distance L between the lever axes: 290 mm / 11,4”
Maximum working load: 600 daN / 1322 lbs
Approximate weight: 4 kg / 8,8 lbs

Catalog No.	LW07-04

Eye Shackle

Single shackle

Catalog No.	Accessories
LW07-04-MO	Eye shackle
LW07-04-MS	Single shackle
LW07-16	Chain binder sold separately (Page 82)

ADJUSTABLE PYLON SADDLE

FUNCTION AND USE

Attached to a upright angles and combined with a pole clamp (sold separately ref. LW07-13-64 page 80), the adjustable pylon saddle is used to guide or immobilise a conductor support stick.
When used in combination with a saddle and frame, or in pairs, the saddle can be used to adjust the position of the pole and give it the desired inclination by means of an adjustment screw.
When the saddle is to be placed on angles larger than 100 mm, the fixing rods must be equipped with hooks and spacers for large angles. When the saddle is to be placed on flat or I-beams, two of these hooks should be replaced with flat hooks.

FEATURES

Material made of metal protected against corrosion.
The tenon of the saddle allows the mounting of a Ø 64 mm (2 ½") pole clamp.
Saddle dimensions (L x W x H): 540 x 240 x 340 mm / 21.25 x 9.4 x 13.4 in.
Dimensions of the angles that can receive the saddle (L x W x H): 50 to 220 mm / from 2" to 8 ½ ".
Adjustment distance D: 200 mm / 8"
Approximate weight: 10 kg / 22 lbs
Accessories :
Hooks for flat or I-beams made of corrosion protected metal.
Dimensions (L x W x H): 61 x 36 x 75 mm / 2.4 x 1.4 x 2.9 in.
Approximate weight: 0.25 kg / 0,55 lbs
Working Load Limit (WLL) :
Load perpendicular to the structure: 270 daN / 595 lbs
Load parallel to the structure: 400 daN / 880 lbs

Catalog No.	LW07-05

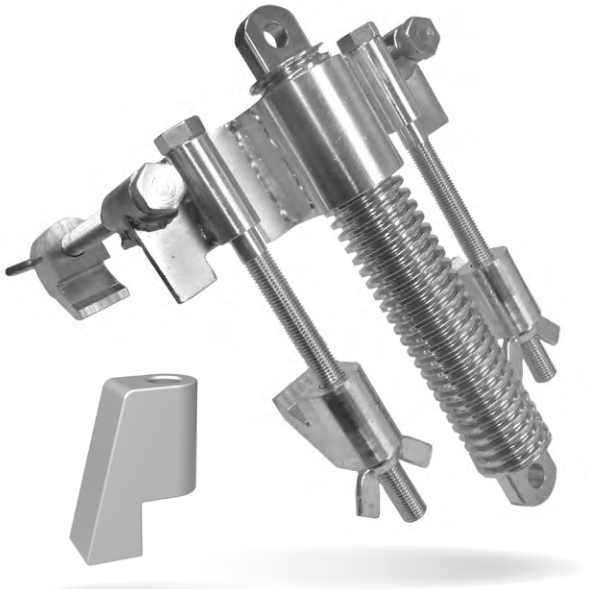

Hook

Catalog No.	Accessories
LW07-06	hooks and spacers for large angles

HOOK AND SPACERS FOR LARGE ANGLED PYLONS

FUNCTION AND USE

Placed on the fixing rods of pylon saddles, the hooks and spacers for large angles are used when the saddle must be placed on angles of more than 100 mm (4").

FEATURES

Material made of metal protected against corrosion
For the hook :
Dimensions (L x W x H): 87 x 80 x 38 mm / 3.45 x 3.15 x 1.5 in.
Approximate weight: 0.7 kg / 1,54 lbs
For the spacer :
Outside diameter: 36 mm / 1,42"
Thickness: 15 mm / .6"
These hooks are designed for 14 to 16 mm (.55" to .63") diameter fixing rods.

Catalog No.	LW07-06

Hook

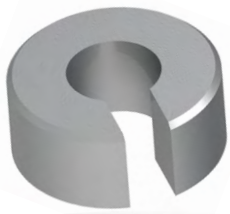

Spacer

VICE CLAMP

FUNCTION AND USE

The vice is used to create an anchor point.
It is particularly suitable for smooth parts, such as a shunt or shunt tube.
In combination with a pole clamp or another vice.
The clamp can be used to secure two parts such as shunts, shunt tubes, conductors between each other.The vice can also be used in combination with a pin pole clamp (ref LW07-14-64) .
The vice must not be used on an insulating tube.

FEATURES

Lifting accessory
Metal protected against corrosion.
The jaws have an elastomer coating.
A hole in the body allows two vices or a pin pole clamp to be connected.
Accessory :
Nut and bolt assembly with spacer and washers, made of corrosion protected metal.
Dimensions :
- In open position: 300 x 85 x 60 mm / 11.8 x 3.3 x 2.3 in.
- In closed position: 230 x 85 x 60 mm / 9 x 3.3 x 2.4 in.

Clamping capacity: 30 to 50 mm / 1,18" to 2"
Approximate weight: 0.75 kg / 1,6 lbs
Maximum working load: 150 daN / 330 lbs
Tightening torque: 18 N.m / 13 ft.lb

Catalog No.	LW07-07 (Vice)
Catalog No.	LW07-07-AXE (Assembly pin)

Connector Vice

Nut and bolt assembly

CROSSARM TYPE SADDLE

FUNCTION AND USE

Fixed on the frames or crossbars of a tower, the crossarm type saddle, with a pole clamp and possibly an extension if additional clearance is required, is used to maneuver and secure a pole.
The use of a rope block is recommended for the maneuvering of the support stick Ø 64 mm (2 ½").

FEATURES

IEC 61236
Material made of metal protected against corrosion.
Approximate weight: 3 to 4 kg (6,6 to 8,8lbs) depending on fixing rods.
Working Load Limit (WLL) on the shackle pin :
- Without saddle extension: 350 daN / 770 lbs.
- With saddle extension: 200 daN / 440 lbs.

Catalog No.	Accessories
LW07-15	Saddle sleeve extension sold separately (Page 82)

Catalog No.	Length of fixing rods (mm)	Saddle dimensions (L x W x H) (mm)	Saddle dimensions (L x W x H) (in)	Maximum spacing between fixing rods (mm)	Maximum spacing between the fixing rods (in)	Clamping capacity (mm)	Clamping capacity (in)	Approx. weight (kg)	Approx. weight (lbs)
LW07-08-205	205	315 x 270 x 72	12.4 x 10.6 x 2.8	200	7,87	10 to 140	.4 to 5,5	3 to 4 (according to the fixing rods)	From 6,6 to 8,8lbs (depending on the fixing rods)
LW07-08-300	300	410 x 270 x 72	16.14 x 10.6x 2.83			10 to 235	.4 to 9,25		
LW07-08-400	400	505 x 270 x 72	19.88 x 10.6 x 2.8			10 to 335	.4 to 13,20		

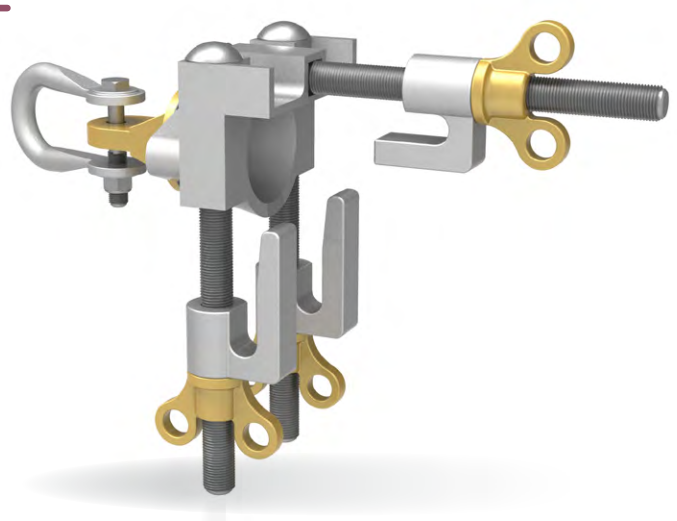

3-HOOKS TOWER TYPE SADDLE

FUNCTION AND USE

Used to support conductor support sticks on towers.
This saddle is securely fastened to the angle-iron tower leg by three hooks tightened by wing nuts.
A clevis which bolts through the pivot lug permits rope blocks to be fastened
This allows rope blocks to pivot with the conductor support stick.
The use of a rope block is recommended for the maneuvering of the support stick Ø 64 mm (2 ½") .
When the saddle is to be used on angle-iron tower legs larger than 100 mm (4"), the fixing rods must be equipped with appropriates hooks and washers.

FEATURES

Material made of metal protected against corrosion.
Working Load Limit (WLL) :
- With saddle extension: 320 daN / 705lbs.
- Without saddle extension: 450 daN / 992 lbs.

Accessories :
Hooks are made of corrosion protected metal.
Dimensions: 61 x 36 x 75 mm / 2.4 x 1.4 x 2.9 in.
Approximate weight: 0.25 kg / .55 lbs.

Catalog No.	Accessories
LW07-06	Hooks and washers for large angles (Page 77)
LW07-15	Saddle sleeve extension sold separately (Page 82)

Catalog No.	Length of fixing rods (mm)	Length of fixing rods (in)	Saddle dimensions (L x W x H) (mm)	Saddle dimensions (L x W x H) (in)	Angle size range (mm)	Angle size range (in)	Approx. weight (kg)	Approx. weight (lbs)
LW07-09-205	205	8	355 x 230 x 135	14 x 9 x 5.3	40 to 120	1,57 to 4,72	3 to 4 (depen-ding on the fixing rods).	From 6,6 to 8,8lbs (depen-ding on the fixing rods).
LW07-09-300	300	11,8	450 x 325 x 135	17.7 x 12.8 x 5.3	40 to 215	1,57 to 8,46		
LW07-09-400	400	15,75	550 x 425 x 135	21.6 x 16.7x 5.3	40 to 315	1,57 to 12,40		

4-HOOKS TOWER TYPE SADDLE

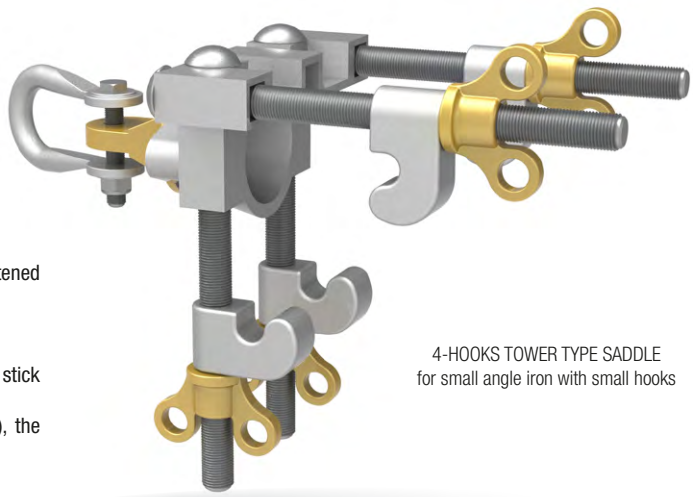

4-HOOKS TOWER TYPE SADDLE
for small angle iron with small hooks

FUNCTION AND USE

Used to support conductor support sticks on towers.
This saddle is securely fastened to the angle-iron tower leg by three hooks tightened by wing nuts.
A clevis which bolts through the pivot lug permits rope blocks to be fastened
This allows rope blocks to pivot with the conductor support sticks.
The use of a rope block is recommended for the maneuvering of the support stick Ø 64 mm (2 ½") .
When the saddle is to be used on angle-iron tower legs larger than 100 mm (4"), the fixing rods must be equipped with appropriates hooks and washers.

FEATURES

4-hooks model
Dimensions: 600 x 300 x 170 mm / 23.6 x 11.8 x 6.7 in.
Dimensions of the angles that can receive the saddle: 70 to 190 mm / 2.75" to 7.5".
Material made of metal protected against corrosion.
Working Load Limit (WLL) :
• With saddle extension: 320 daN / 705lbs.
• Without saddle extension: 450 daN / 992 lbs.
Approximate weight: 7.4 kg / 16,31lbs

Catalog No.	**LW07-10-PM** (Small model)
	LW07-10-GM (Large model)

Catalog No.	Accessories
LW07-06	Hooks and washers for large angles (Page 77)
LW07-15	Saddle sleeve extension sold separately (Page 82)

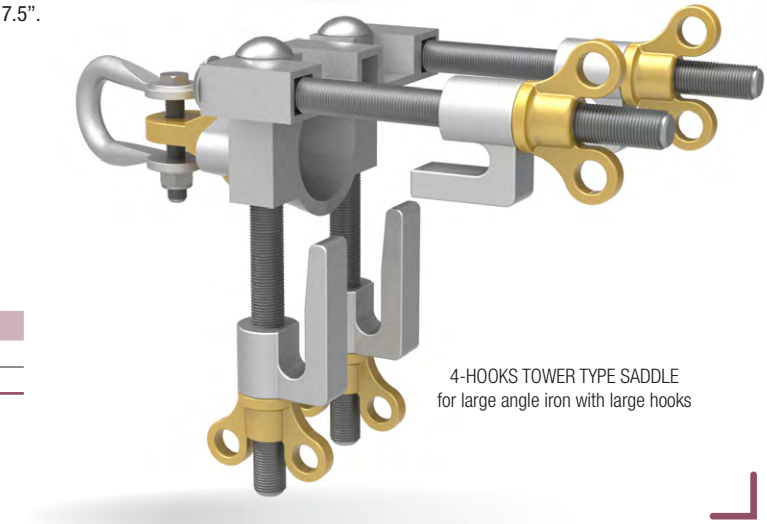

4-HOOKS TOWER TYPE SADDLE
for large angle iron with large hooks

POLE TYPE SADDLE

FUNCTION AND USE

Attached with a chain binder to a support other than a tower, the pole type saddle, with a pole clamp and possibly an extension if additional clearance is required, is used to maneuver and secure a conducter support stick.

FEATURES

IEC 61236
Material made of metal protected against corrosion.
Dimensions (L x W x H): 220 x 230 x 130 mm / 8.66 x 9.06 x 5.12 in.
Chain length: 600 mm / 1'11"
Approximate weight: 2.8 kg / 6,1 lbs
Working Load Limit (WLL) :
• With extension: 320 daN / 705 lbs
• Without extension: 450 daN / 992 lbs

Catalog No.	**LW07-11**

Catalog No.	Accessories
LW07-15	Saddle sleeve extension sold separately (Page 82)
LW07-16	Chain binder sold separately (Page 82)

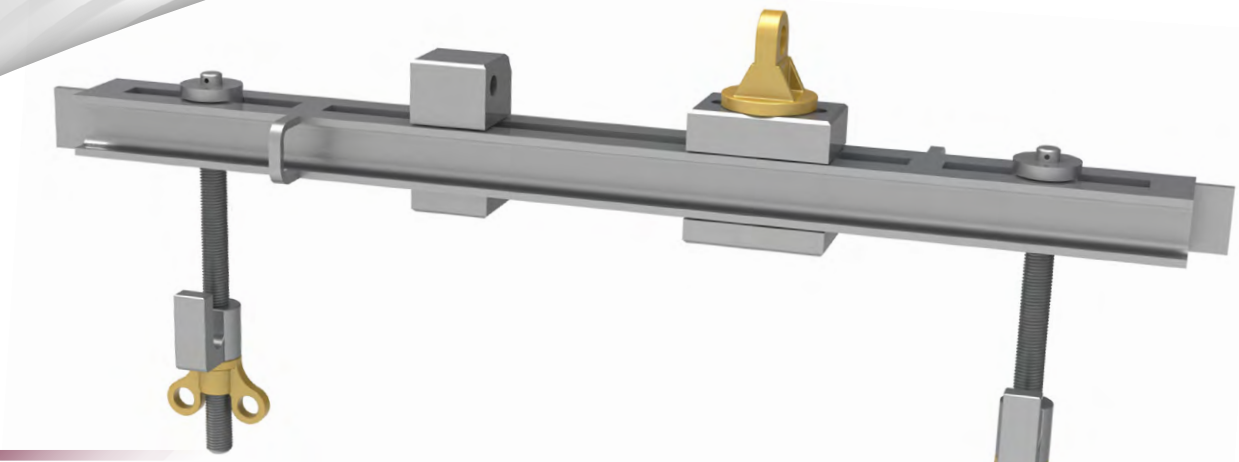

FLAT TYPE SADDLE

FUNCTION AND USE

Fixed on the frames or crossbars of a tower, the flat type saddle, with a pole clamp and possibly an extension if additional clearance is required, is used to maneuver and secure a conducter support stick.
The use of a rope block is recommended for the maneuvering of the support stick Ø 64 mm (2 ½").

Catalog No.	LW07-12

FEATURES

IEC 61236
Material made of metal protected against corrosion.
The flat type saddle is composed of :
- a slide.
- a rotating head for a sleeve
- two angle brackets with hook and wing nut set

Dimensions (L x W x H): 800 x 100 x 150 mm / 31.5 x 4 x 5.9 in.
Angle size range: 40 to 120 mm / 1,5" to 4,7".
Approximate weight: 8 kg / 17,6 lbs
Working Load Limit (WLL) :
- With extension: 200 daN / 440 lbs
- Without extension: 400 daN / 881 lbs

Catalog No.	Accessories
LW07-15	Saddle sleeve extension sold separately (Page 82)

POLE CLAMP

FUNCTION AND USE

Attached to a pole type saddle with an extension if additional clearance is required. The pole clamp is used to receive a conductor support stick for the purpose of maneuvering a conductor.
The use of a rope block is recommended for the maneuvering of the support stick Ø 64 mm (2 ½").
It is recommended to check the tightening torque of the wingnut using a torque wrench and the wing nut socket (sold separately).

FEATURES

IEC 61236
Metal sleeve made of :
- 2 shells with stainless steel fittings
- A wing nut with an anti-friction washer

Recommended tightening torque on the wing nut: 17 N.m / 12.5 lb.ft (wing nut socket sold separately)

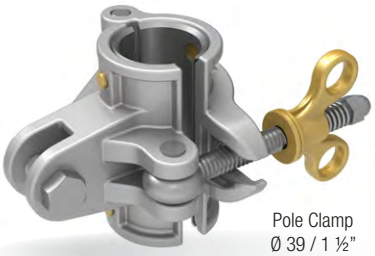

Pole Clamp
Ø 39 / 1 ½"

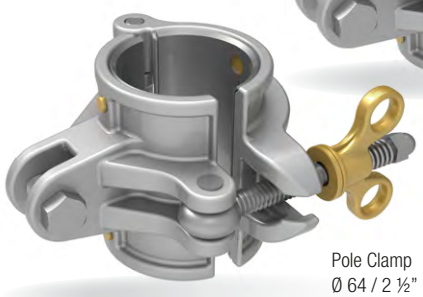

Pole Clamp
Ø 64 / 2 ½"

Catalog No.	Accessories
LW07-14-DS	Wing nut socket

Catalog No.	Model	Dimensions (mm)	Dimensions (in)	Approx. weight (kg)	Approx. weight (lbs)	Clamping capacity (mm)	Clamping capacity (in)	Working Load Limit (WLL) in the axis of the pole without slipping (daN)	Working Load Limit (WLL) in the axis of the pole without slipping (lbs)	Working Load Limit (WLL) perpendicu-lar to the pole axis (daN)	Working Load Limit (WLL) perpendicu-lar to the pole axis (lbs)
LW07-13-39	Ø 39 / 1 ½"	100 x 125 x 180	3.9 x 4.9 x 7	0,8	1,8	Ø 39 ± 1	Ø 1 ¼ ± .04	130	287	180	397
LW07-13-64	Ø 64 / 2 ½"	100 x 155 x 195	3.9 x 6,1 x 7,6	1,15	2,5	Ø 64 ± 1	Ø 2 ½ ± .04	220	485	310	683

Pole Clamp Ø 39 / 1 ½"

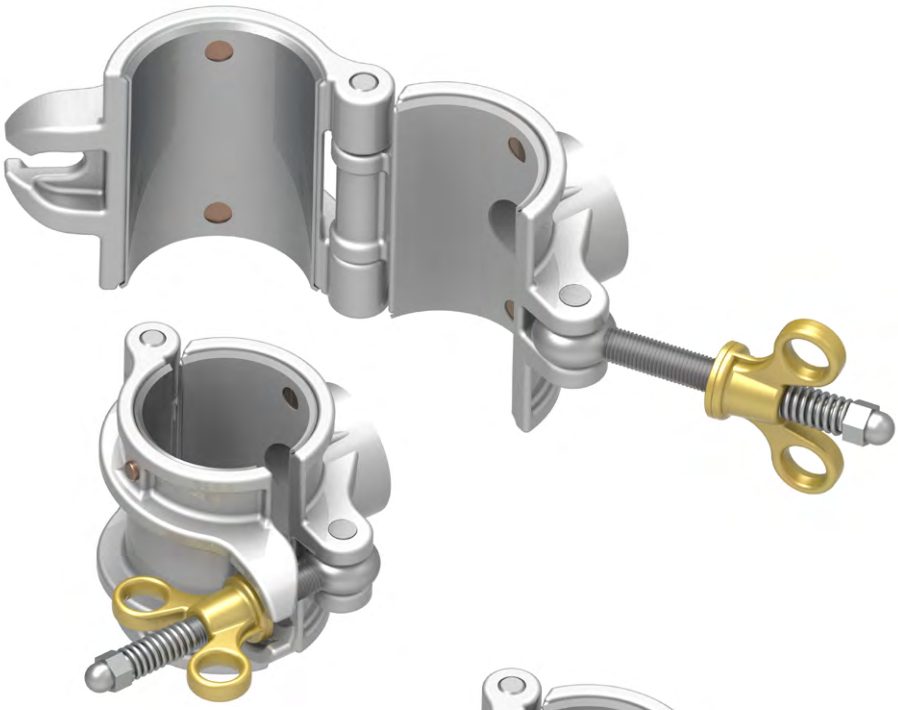

Pole Clamp Ø 64 / 2 ½"

FLAT POLE CLAMP

FUNCTION AND USE

Directly attached to the saddle, this clamps brings the conductor support stick closer to the support when required for certains interventions.
The use of a rope block is recommended for the maneuvering of the support stick Ø 64 mm (2 ½").
It is recommended to check the tightening torque of the wingnut using a torque wrench and the wing nut socket (sold separately).

FEATURES

IEC 61236
Corrosion protected metal sleeve consisting of :
- 2 shells with stainless steel fittings
- A wing nut with an anti-friction washer

Recommended tightening torque on the wing nut: 17 N.m / 12.5 lb.ft (wing nut socket sold separately)

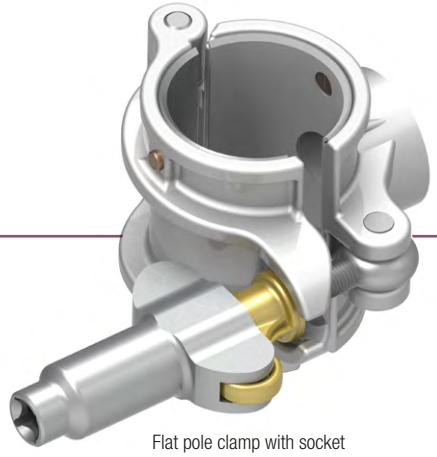

Flat pole clamp with socket

Catalog No.	Accessories
LW07-14-DS	Wing nut socket

Catalog No.	Model	Dimensions (mm)	Dimensions (in)	Approx. weight (kg)	Approx. weight (lbs)	Clamping capacity (mm)	Clamping capacity (in)	Working Load Limit (WLL) in the axis of the pole without slipping (daN)	Working Load Limit (WLL) in the axis of the pole without slipping (lbs)	Working Load Limit (WLL) perpendicu-lar to the pole axis (daN)	Working Load Limit (WLL) perpendicu-lar to the pole axis (lbs)
LW07-14-39	Ø 39 / 1 ½"	150 x 130 x 100	5.9 x 5.1 x 3.9	0,9	2,0	Ø 39 ± 1	Ø 1 ¼ ± .04	130	287	180	397
LW07-14-64	Ø 64 / 2 ½"	165 x 155 x 100	6.5 x 6.1 x 3.9	1,3	2,9	Ø 64 ± 1	Ø 2 ½ ± .04	220	485	310	683

ACCESSORIES

Catalog No.	Accessories
LW07-14-TEN	Tenon
LW07-14-CHA	Clevis
LW07-14-MAN	Shackle
LW07-14-AXE	Bolt

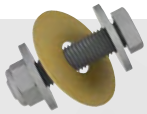

Bolt

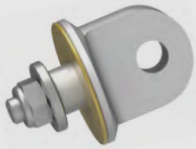

Tenon

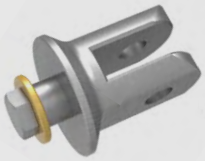

Clevis

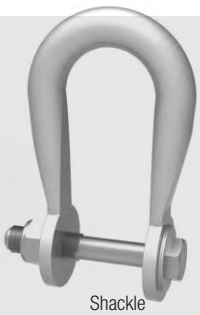

Shackle

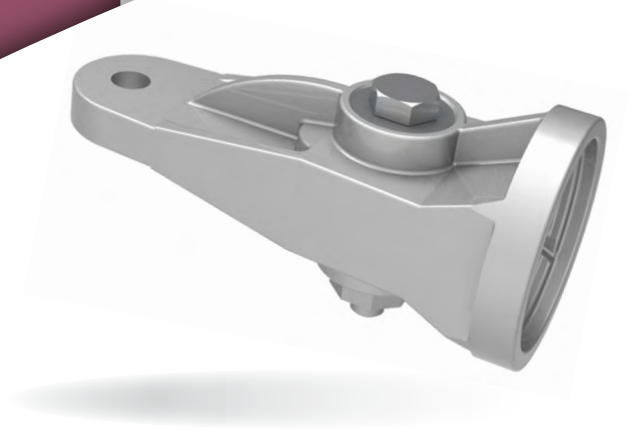

SADDLE EXTENSION

FUNCTION AND USE

Attached to different sadle types by a tenon (sold separately) the saddle extension is used in conjuction with a pole clamp when it is necessary to move the conductor support stick away from the support or any other obstacle that may impede the placement or manoeuvring of the support sticks.

FEATURES

IEC 61236
Material made of metal protected against corrosion.
Dimensions: length 152 mm (6”), Ø 72 mm (2,83”) distance between axis 80 mm (3,1”).
Approximate weight: 0.5 kg / 1,1 lbs
Working Load Limit (WLL): 320 daN / 705 lbs.

Catalog No.	LW07-15

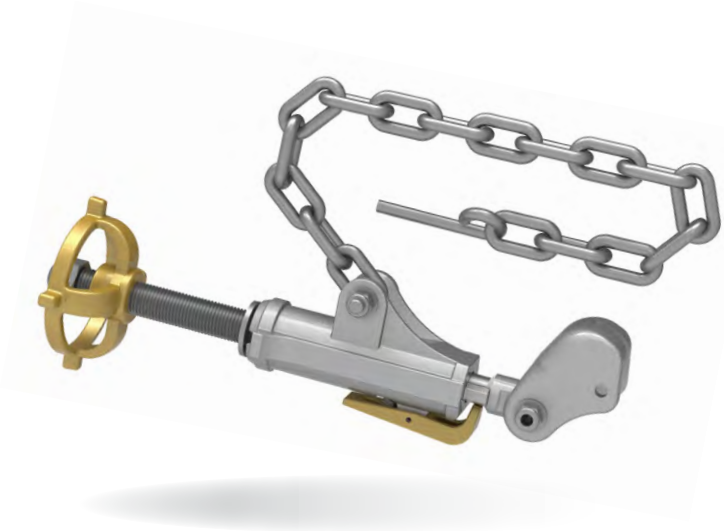

CHAIN BINDER

FUNCTION AND USE

The Chain binder is used to attach certain tools, such as lever saddles and saddles, etc., to the supports.
When the chain is too short to fit around a pole, it can be extended with the chain extension (sold separately).

FEATURES

IEC 61236
Handwheel and latch made of light alloy and bronze.
Chain made of corrosion protected steel.
Chain length: 900 mm / 35,4”
Approximate weight with chain: 2.6 kg / 5,7 lbs
Working Load Limit (WLL) in traction: 600 daN / 1322 lbs

Catalog No.	LW07-16

CHAIN EXTENSION

FUNCTION AND USE

Extension chain is used to extend the lenght of the chain binder.

FEATURES

IEC 61236
Material made of metal protected against corrosion.
The Working Load Limit (WLL) of the chain extension is independent of the tensile force generated by the manual tightening of the handwheel of the device.

Catalog No.	Length of the chain (mm)	Length of the chain (in)	Approx. weight (kg)	Approx. weight (lbs)	Working Load Limit (WLL) (daN)	Working Load Limit (WLL) (lbs)
LW07-17-600	600	23,6	1,0	2,2	600	1323
LW07-17-900	900	35,4	1,3	2,8		

Other lengths available on request (please contact us)

HANDLING AND ACCESSORIES

ENDLESS POLYESTER ROUND SLING - E25

FUNCTION AND USE

Textile sling mainly dedicated to lifting loads.
When lifting concrete poles, it is imperative to use a protective sheath.
100% polyester sling with high tenacity.
Reinforced outside sheath.
Label : identification, information, certificate, traceability.
Color code of the sling which informs about the WLL.

FEATURES

Sling manufactured according to EN 1492- 2
Safety coefficient 7:1

Lenght	1.000 kg 2204 lbs	2.000 kg 4409 lbs	3.000 kg 6613 lbs	4.000 kg 8818 lbs	5.000 kg 11023 lbs	6.000 kg 13227 lbs	8.000 kg 17636 lbs	10.000 kg 22046 lbs
0,5 m*	E25N1T05M	E25N2T05M	E25N3T05M	-		-	-	-
1,0 m*	E25N1T1M	E25N2T1M	E25N3T1M	E25N4T1M	E25N5T1M	-	-	-
1,5 m*	E25N1T15M	E25N2T15M	E25N3T15M	E25N4T15M	E25N5T15M	-	-	-
2,0 m*	E25N1T2M	E25N2T2M	E25N3T2M	E25N4T2M	E25N5T2M	E25N6T2M	-	-
2,5 m*	E25N1T25M	E25N2T25M	E25N3T25M	E25N4T25M	E25N5T25M	E25N6T25M	E25N8T25M	-
3,0 m*	E25N1T3M	E25N2T3M	E25N3T3M	E25N4T3M	E25N5T3M	E25N6T3M	E25N8T3M	E25N10T3M
4,0 m*	E25N1T4M	E25N2T4M	E25N3T4M	E25N4T4M	E25N5T4M	E25N6T4M	E25N8T4M	E25N10T4M
6,0 m*	-	-	-	-	-	-	-	E25N10T6M

*Length of the loop when flat

FLAT POLYESTER WEBBING SLING - E26

FUNCTION AND USE

Textile sling mainly dedicated to lifting loads.
When lifting concrete poles, it is imperative to use an anti-abrasion sleeve and a protective sheath.
100% polyester sling with high tenacity.
Label : identification, information, certificate, traceability.
Color code of the sling which informs about the WLL.

FEATURES

Sling manufactured according to EN 1492 1
Safety coefficient 7:1

WLL and color code	1.000 kg 2204 lbs	2.000 kg 4409 lbs	3.000 kg 6613 lbs	4.000 kg 8818 lbs	5.000 kg 11023 lbs	6.000 kg 13227 lbs	10.000 kg 22046 lbs
Width (mm) >>>	38 mm	60 mm	90 mm	120 mm	140 mm	170 mm	270 mm
1,0 m*	E26N1T1M	E26N2T1M	-	-	-	-	-
1,5 m*	E26N1T15M	E26N2T15M	E26N3T15M	-	-	-	-
2,0 m*	E26N1T2M	E26N2T2M	E26N3T2M	E26N4T2M	E26N5T2M	-	-
2,5 m*	E26N1T25M	E26N2T25M	E26N3T25M	E26N4T25M	-	-	-
3,0 m*	E26N1T3M	E26N2T3M	E26N3T3M	E26N4T3M	E26N5T3M	E26N6T3M	-
4,0 m*	E26N1T4M	E26N2T4M	E26N3T4M	E26N4T4M	E26N5T4M	E26N6T4M	E26N10T4M
5,0 m*	E26N1T5M	E26N2T5M	E26N3T5M	E26N4T5M	E26N5T5M	E26N6T5M	-
6,0 m*	E26N1T6M	E26N2T6M	E26N3T6M	E26N4T6M	E26N5T6M	E26N6T6M	-

*Length of the strap when flat

RING STRAP

FUNCTION AND USE

Wrapped around a concrete or wooden pole and secured with a ratchet system, the ring strap provides a fixing point for a clampstick or a universal stick equiped with a rotary prong.
It allows the operator to secure and stabilize the pole whilst loading or unloading or positioning before planting without coming into direct contact with the load.
This helps to eliminate injures to operators who can now maintain a safe distance.
It should in no way be used to lift any sort of load bearing items.

FEATURES

Strap is made of synthetic material.
All elements made of corrosion protected metal.
Total length of strap with ratchet: 2.50m (8 ft 20 in)
Approximative combined weight: 2.5kg (5.5 lbs)

Catalog No.	LW08-06-RS

SYNTHETIC FIBRE ROPE

FUNCTION AND USE

The synthetic fibre rope can be used as a service rope.
It can also be used with rope blocks for load handling.
It should not be considered under any circumstances an insulating rope.

FEATURES

Synthetic fibre rope, 3-strand or braided.
Diameter of between 12 and 14 mm(0,47" to 0,55") and can be fitted with a knot at the end.
Approximate weight: 110 g/m (0.8157 lbs/ft).
Working Load Limit (WLL): 280 daN / 617 lbs.
Sold in rolls of 50 or 100 m (164' or 328')
Other lengths available on request - please contact us

Catalog No.	Accessories
LW08-03-C3T-50 LW08-03-C3T-100	3-stranded rope
LW08-03-TTD-50 LW08-03-TTD-100	Braided rope

INSULATING ROPE

FUNCTION AND USE

Insulating rope is used for handling equipment and tools, such as insulator chains and ladder brackets, or for maneuvering work equipment such as hoist ladders, seats or beams.
Insulating slings are used, for example, to sling a load suspended from a helicopter.

FEATURES

The rope and the insulating sling are made of insulating fibre, 3 strands.

Catalog No.	Designation	Rope length on reel (m)	Rope length on reel (ft)	Ø (mm)	Ø (mm)	Working Load Limit (daN)	Working Load Limit (lbs)	Linear weight (gr/m)	Linear weight (lbs/ft)
LW08-04-8-100	Model 1	100	328	8	1/3	50	110	35	0,25
LW08-04-8-200		200	656						
LW08-04-8-300		300	984						
LW08-04-14-100	Model 2	100	328	14	5/9	240	529	110	0,82
LW08-04-14-200		200	656						
LW08-04-14-300		300	984						
LW08-04-19-100	Model 3	100	328	19	3/4	350	771	155	1,12
LW08-04-19-200		200	656						
LW08-04-19-300		300	984						
LW08-04-35-100	Model 4	100	328	35	1 3/8	1000	2204	550	3,97
LW08-04-35-200		200	656						
LW08-04-35-300		300	984						

SUPPORT ROPE
(equipped with two tensioners)

FUNCTION AND USE
The support rope is used to triangulate the service rope. It allows the triangulation to be varied by changing the position of the tensioners.

FEATURES
Three-strand synthetic fibre rope with a diameter of between 12 and 14 mm (0,47” to 0,55”). Equipped with two tensioners and with a spliced eye at one end.
Length: 20 m / 65’ 7”.
Approximate weight: 110 g/m (0.8157 lbs/ft).
Maximum sliding load of one tensioner: 50 daN / 110 lbs.
Other lengths are available on request - please contact us.

Catalog No.	LW08-02

Catalog No.	Accessories
LW08-02-TEN	Tensioners sold individually

SERVICE HOOK

FUNCTION AND USE
The service rope hook is used to hoist the material and tools required by the lineman.

FEATURES
Height x Width x Thickness: 140 x 80 x 10 mm / 5.5 x 3.1 x 0.4 in.
Working Load Limit (WLL): 100 daN / 220 lbs

Catalog No.	LW08-05-ALU	aluminium version / 90 g (0,2 lbs)
Catalog No.	TC160H	composite version / 50 g (0,11 lbs)

Catalog No.	Accessory
LW08-20-4	Snatch blocks (Page 90)

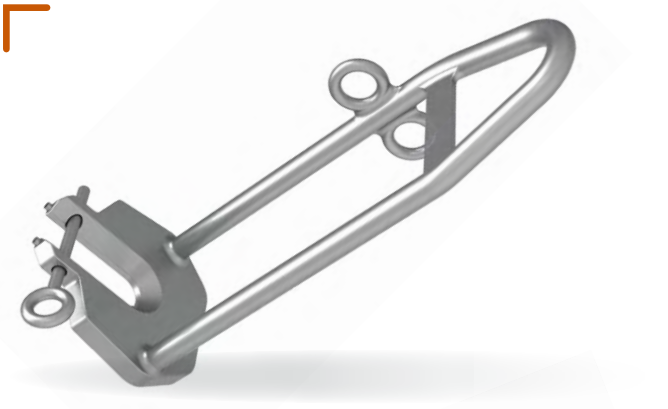

ANCHORING CLAMP 1300

FUNCTION AND USE
Placed behind the ball-socket, and secured by its locking system, the anchor clamp provides a fixed mooring point to allow all maintenance work required on dead ends and realization of double dead ends.

FEATURES
All elements made of corrosion protected metal.
Dimensions : 334 x133 x 120 mm / 13.1 x 5.2 x 4.7 in.
Approximate weight: 2 kg / 4,4 lbs.
Working Load Limit (WLL): 1300 daN / 2866 lbs

Catalog No.	LW08-07

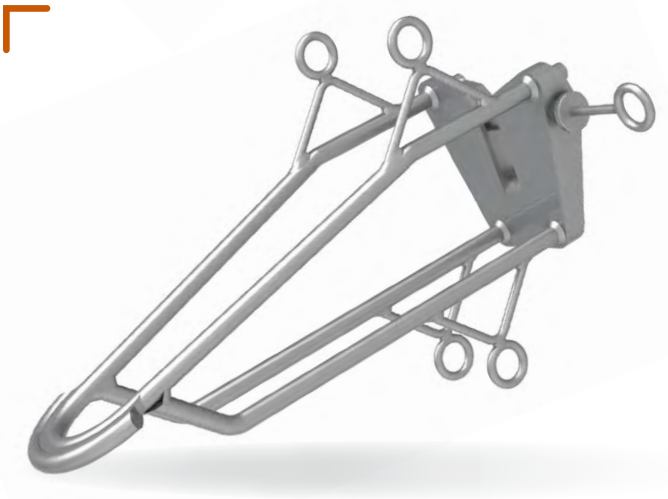

ANCHORING BRACKET 2200

FUNCTION AND USE
Placed behind the ball-socket, and secured by its locking system, the anchor clamp provides a fixed mooring point to allow all maintenance work required on dead ends and realization of double dead ends.

FEATURES
All elements made of corrosion protected metal.
Groove opening: 21 mm / 0.83”
Dimensions : 400 x 225 x 120 mm / 15.7 x 8.9 x 4.7 in. Approximate weight: 4 kg / 8,8 lbs
Working Load Limit (WLL): 2200 daN / 4850 lbs

Catalog No.	LW08-08

Hot Line clamp

Hot Line clamp with ring

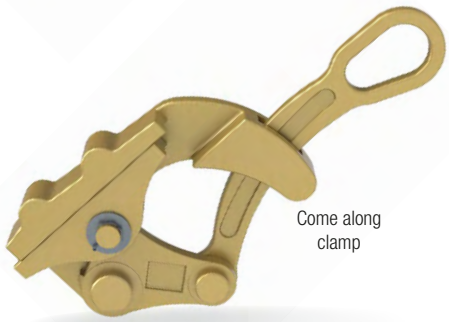

Come along clamp

COME ALONG CLAMP

FUNCTION AND USE

The come along clamp is used to provide an anchor point on a conductor, in order to :

- its longitudinal displacement,
- its immobilisation,
- the modification of its mechanical tension.

A short opening quick link can be combined with a spring-loaded cable tie. This allows the suspension ring to be arranged in a horizontal plane.

LW models are designed for use with hot line tools and regular line work.
The top ring is used for placing the clamp on a conductor with a hot stick.
When released the latch locks the clamp on the line and ensures it will not fall off.
Reduce slippage thanks to the serrated jaw.

DW models are handheld tools.
Reduce slippage thanks to the serrated jaw.

FEATURES

Body, grooved lower jaw, locking lever and safety latch made of corrosion protected metal.
Quick-link (WLL: 2200daN / 4850 lbs) made of corrosion protected metal.

Catalog No.	Accessory
LW08-11-MR	Quick-link sold separately

Catalog No.	Model	Wire Size Ø (mm) Min. - Max.	Wire Size Ø (inch) Min. - Max.	Section (mm²) Min. - Max.	Section (KCMIL) Min. - Max.	Dimensions (mm)	Dimensions (in)	Approx. weight (kg)	Approx. weight (kg)	Working load Limit (WLL) daN.	Working load Limit (WLL) lbs.
Hot Line clamp											
LW08-11-PM	Small	4,6 - 15,2	.18 - .60	17 - 181	34 - 358	295 x 155 x 52	11.61 x 6.10 x 2.05	2	4	2268	5000
LW08-11-MM	Medium	5 - 25	.2 - .98	20 - 490	39 - 966	317 x 164 x 54	12.48 x 4.25 x 1.89	4	7	4536	10000
LW08-11-GM	Big	17,8 - 31,8	.7 - 1.25	249 - 795	90 - 1568	345 x 185 x 65	13.58 x 7.28 x 2.56	4	8	5443	12000
Hot Line clamp with ring											
LW08-11-PMA	Small	4,6 - 15,2	.18 - .60	17 - 181	34 - 358	295 x 105 x 47	11.61 x 6.10 x 2.05	2	4	2268	5000
LW08-11-MMA	Medium	5 - 25	.2 - .98	20 - 490	39 - 966	317 x 108 x 48	12.48 x 4.25 x 1.89	4	7	4536	10000
LW08-11-GMA	Big	17,8 - 31,8	.7 - 1.25	249 - 795	90 - 1568	345 x 135 x 60	13.58 x 7.28 x 2.56	4	8	5443	12000
Come along clamp											
DW08-11-PM	Small	4,6 - 15,2	.18 - .60	17 - 181	34 - 358	295 x 105 x 47	11.61 x 6.10 x 2.05	2	4	2268	5000
DW08-11-MM	Medium	5 - 25	.2 - .98	20 - 490	39 - 966	317 x 108 x 48	12.48 x 4.25 x 1.89	4	7	4536	10000
DW08-11-GM	Big	17,8 - 31,8	.7 - 1.25	249 - 795	90 - 1568	345 x 135 x 60	13.58 x 7.28 x 2.56	4	8	5443	12000

SNAP HOOK

FUNCTION AND USE

The snap hook can be use as an anchor point for the service rope or guiding the operating ropes.

FEATURES

Metal body protected against corrosion.
Closing ensured by the latch equipped with a return spring.
Dimensions: 100 x 63 x 15 mm / 3.94 x 2.48 x 0.59 in
Approximate weight: 0.15 kg / 0,33 lbs.
Working Load Limit (WLL): 120 daN / 265 lbs.

Catalog No.	LW08-12

MANUAL CABLE HOIST

FUNCTION AND USE

This «winch» hoist can be used for lifting, handling, pulling (hauling) or mechanical tensioning operations.
Ultra portable hoists for all building or repairing operations, particularly suitable for work at height.
Device equipped with 3 hooks which allows to pull in all positions.
Approved as a lifting device.
Machinery directive 2006/42/EC.

FEATURES

All metaic parts, cable, hooks and operating lever in corrosion-protected metal.
Optional insulated handle.

Catalog No.	Designation	Model	Distance between hooks (m)	Distance between hooks (ft)	Working load Limit (WLL) daN.	Working load Limit (WLL) lbs.	Approx. weight (kg)	Approx. Weigh (lbs)
LW08-13-1	Model 1	2 strand	0,66 à 4,60	2'1" to 15'1"	1250	2756	6,2	4
		simple strand			625	1378		
LW08-13-2	Model 2	2 strand	0,47 à 9,20	1'6" to 30'2"	1400	3086	6,2	4
		simple strand	0,66 to 9,20	2'1" to 30'2"	700	1543		

Accesories

Catalog No.	Designation	Total length (mm)	Total length (in)
LW08-13-LMI1	Insulated operating lever for model 1250	620 x 40 x 40	24.4 x 1.6 x 1.6
LW08-13-LMI2	Insulating lever for model 1600	750 x 40 x 40	29.5 x 1.6 x 1.6

ROPE BLOCK TACKLE HOIST

FUNCTION AND USE

This hoist is used to apply tensile forces (e.g. for adjusting conductors), lift loads (e.g. a transformer) or move a triangulation.
Swivel hooks with a 21 mm opening equipped with a safety latch that has a ring for handling with a pole.
The sheaves and block bodies are made of insulating synthetic material.

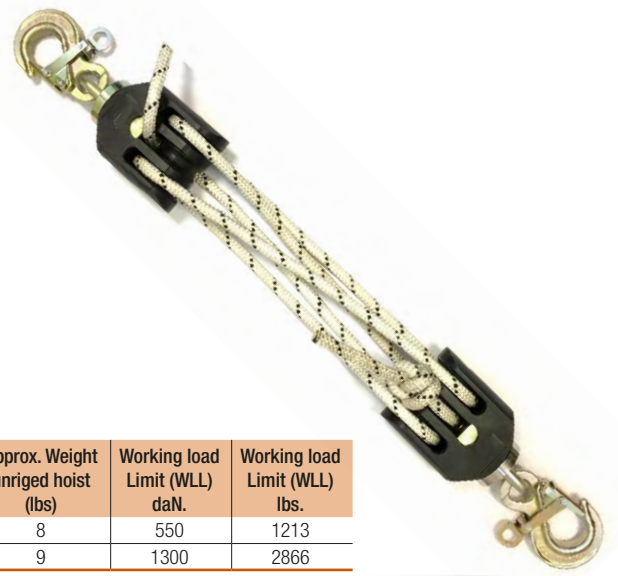

FEATURES

The hoist consists of two synthetic blocks with swivel hooks and a safety latch.
Supplied without rope.

Catalog No.	Model	Number of strands	Rope diameter (mm)	Rope diameter (in)	Approx. weight unriged hoist (kg)	Approx. Weight unriged hoist (lbs)	Working load Limit (WLL) daN.	Working load Limit (WLL) lbs.
LW08-14-550	550 daN	5	12 to 16	.47" to .5/8"	3,6	8	550	1213
LW08-14-1300	1300 daN				4	9	1300	2866

TIRVIT WIRE TENSIONERS

FUNCTION AND USE

Anchored to a support, it can be used to pull and tension electrical and telephone lines, guy wire, fences of any length.

FEATURES

Light, handy and compact, the tensioner combines simplicity and robustness.
The 2 self tightening jaws, operated by reciprocating movements, engage directly on the wire or cable.
T43F2 and T44F3 equipped with an anchoring chain.
T45F4 equipped with a steel wire rope anchor sling.

T43 -44 -45

Catalog No.	Capacity (kg)	Capacity (lbs)	Cable Ø mm	Cable Ø in	Cable cross-section (mm²)	Cable cross-section (KCMIL)	Dimensions (mm)	Dimensions (in)	Approx. weight (kg)	Approx. Weight (lbs)
T43F2	400	882	2 - 8 mm	.08" to .31"	3 - 40 mm²	6-79	535 x 90 x 90	21.1 x 3.5 x 3.5	4	9
T44F3	600	1323	7 - 15 mm	.28" to .59"	30 - 120 mm²	59 - 236	625 x 110 x 110	24.6 x 4.3 x 4.3	5,2	11
T45F4	800	1764	14 - 18 mm	.55" to .71"	90 - 220 mm²	177 - 434	625 x 115 x 115	24.6 x 4.5 x 4.5	6,2	14

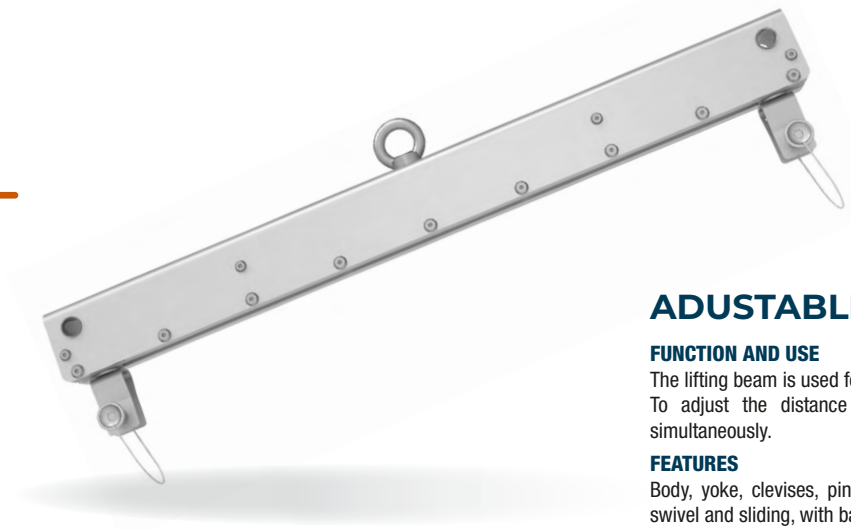

ADUSTABLE LIFTING BEAM

FUNCTION AND USE

The lifting beam is used for pole mounted transformers.
To adjust the distance between the clevises, both clevises must be operated simultaneously.

FEATURES

Body, yoke, clevises, pins, made of metal protected against corrosion. Clevises are swivel and sliding, with balanced spacing.

Catalog No.	Minimum spacing (m)	Minimum spacing (in)	Maximum spacing (m)	Maximum spacing (.ft and .in)	Dimensions (mm)	Dimensions (in)	Working load Limit (WLL) daN.	Working load Limit (WLL) lbs.	Approx. weight (kg)	Approx. Weight (lbs)
LW08-16	0,28	11	0,85	2 ft. 9 in.	900 x 90 x 60	35.4 x 3.5 x 2.4	650	1433	5,3	12

SERVICE ROPE GIN

FUNCTION AND USE

In combination with the fixed ring saddle, the service rope gin is used as an anchor point. The service rope gin provides a space between the pole and the top of the service rope which facilitate the reception of materials and tools.

FEATURES

Material made of metal protected against corrosion.
Dimensions: 420 x 190 x 130 mm / 16.5 x 7.5 x 5.1 in
Approximate weight: 1.5 kg / 3,3 lbs.
Working load Limit (WLL) : 100 daN / 220 lbs.

Catalog No.	LW08-17

GIN

FUNCTION AND USE

The gin is used for replacing pole-mounted transformers with the help of a rope block configuration.

FEATURES

Material made of metal protected against corrosion.
Includes 2 fixed brackets. The gripping brackets are removable and made of metal.
Dimensions (L x W x H): 440 x 170 x 230 mm / 17.3 x 6.7 x 9.1 in.
Approximate weight: 4 kg / 8,8 lbs.
Working load Limit (WLL) : 660 daN / 1322 lbs.

Catalog No.	LW08-18

SNATCH BLOCKS

FUNCTION AND USE

Lightweight, cast-aluminum housing and sheave with hinged, cotter-lock yoke forged steel, this makes for quick and easy rigging in various applications.

FEATURES

Opening type pulley in aluminium alloy.
Hook with locking latch and grip ring for models 1 and 4.
Opening clevis with captive pin.
Maximum rope size is 16 mm (.63”)

Model 1 Model 2 Model 3 Model 4

Snatch blocks	Catalog No.	Sheave diameter (mm)	Sheave diameter (in)	Dimensions (mm)	Dimensions (in)	Working load Limit (WLL) daN.	Working load Limit (WLL) lbs.	Approx. Weight (kg)	Approx. Weight (lbs)
With movable flange									
Model 1	**LW08-20-1**	130	5,12	400 x 460 x 85	15.75 x 18.11 x 3.35	500 on the hook	1102 on the hook	3	7
Model 2	**LW08-20-2**	60	2,36	270 x 90 x 80	10.6 x 3.5 x 3.1	250 on the hook	551 on the hook	1,5	3
With fixed flange									
Model 3	**LW08-20-3**	60	60	275 x 120 x 75	10.8 x 4.7 x 3	500 on the hook	1102 on the hook	2	4
Model 4	**LW08-20-4**	60	60	285 X 130 X 65	11.2 x 5.1 x 2.6	240 on the hook	529 on the hook	1,2	3

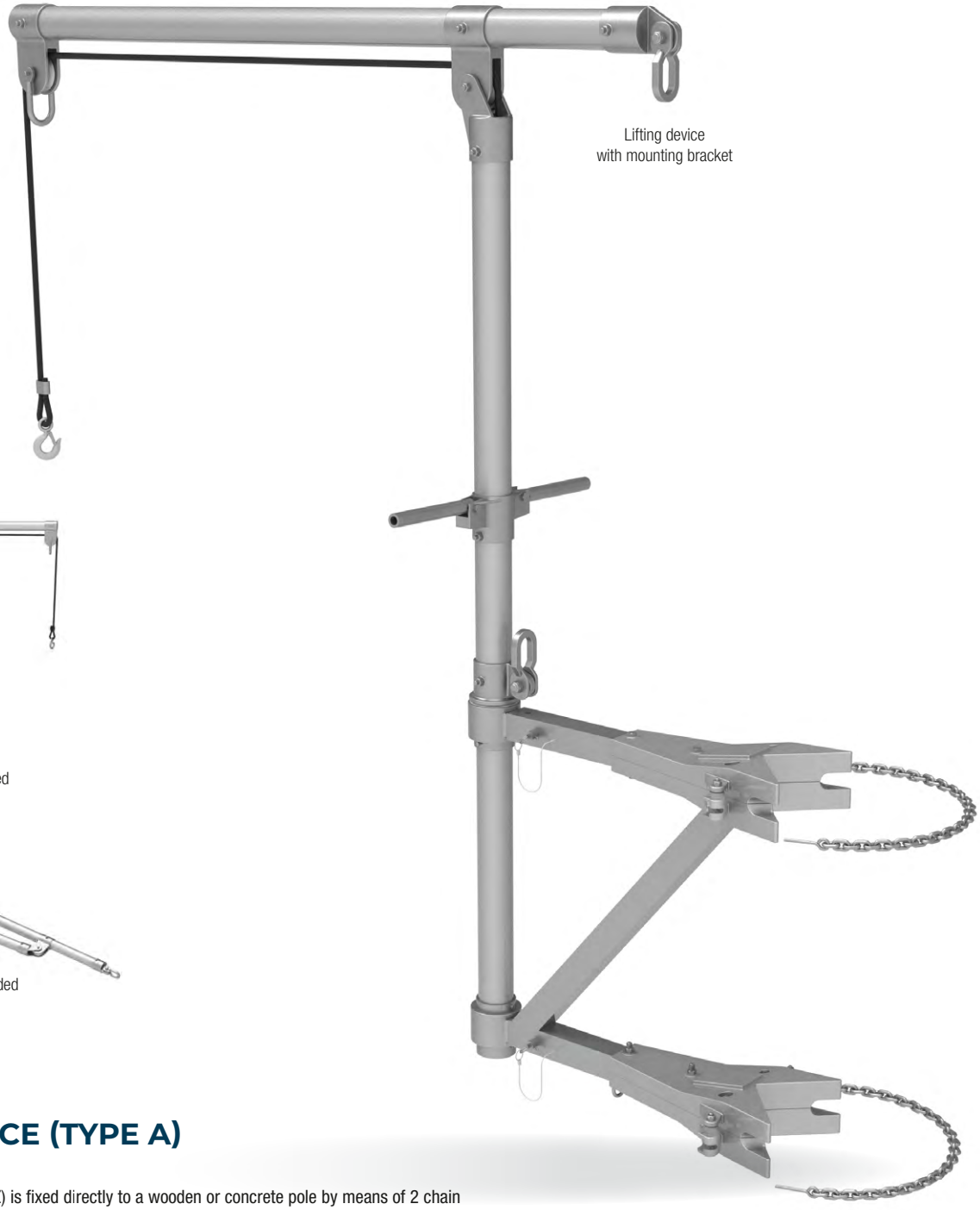

Lifting device
with mounting bracket

Lifting device opened

Lifting device folded

LIFTING DEVICE (TYPE A)

FUNCTION AND USE

The metal mounting bracket (Z) is fixed directly to a wooden or concrete pole by means of 2 chain binders (sold separately on page 82).
The lifting device is used to remove, install or replace an overhead switches.
The lifting device requires a hoist, sold separately (see page 88)
This device is equipped with a synthetic fiber rope of approximately 50m.

FEATURES

- Metal mounting bracket (Z) protected against corrosion,
- Equipped with 2 chains binders
  Offset: 0.70 m / 2 ft. 3 in.
  Height: 0.85 m / 2 ft. 9 in.
  Approximate weight: 28 kg / 61,7 lbs
- Lifting device is made of corrosion-protected metal
  Mast height: 2.05 m / 6 ft. 8 in.
  Total boom length: 1.9 m / 6 ft. 2 in.
  Maximum boom offset: 1.30 m / 4 ft. 3 in.
  Approximate weight: 21 kg /46,30 lbs
- Synthetic fibre rope with an approximate diameter of 12-14 mm (.47” - .55”) and usually 50 m (164’) long.
- Hoist equal to or greater than 600 daN (1322 lbs) (sold separately see page 88)

Catalog No.	LW08-19

Mounting bracket

Catalog No.	Accessories
LW08-19-CF	Mounting bracket (Z)
LW07-16	Chain binder
LW08-19-MF	Lifting device
LW08-03-C3T-50	Rope with hook
LW08-13-1	Hoist

PORTABLE CAPSTAN WINCH WITH ROPE, APPROVED FOR LIFTING

FUNCTION AND USE
Capstan winch for lifting or pulling loads, but also applicable for stringing cable without length limit.

FEATURES
Industrial applications and electrical power lines.

Capstan winch with rope for pulling without length limit.
Approved for lifting up to 250kg (551 lbs).
Rope guide with lock to ensure that it stays in position.
Very light tool with a pulling force of 775kg (1708 lbs).
Wide range of accessories for working in all situations.

GAS POWERED WINCH

Robust 4 stroke engine with easy maintenance.
Centrifugal clutch to optimize pulling and manage the final approach with precision.
Optional Ø85mm (3,35") capstan wheel which allow you to choose the desired speed/force compromise.
Possibility of multiplying the force by reeving using pulley blocks.

Catalog No.	HL-PCH1000

Decription	Ø 57 mm / 2,25"	Ø 85 mm / 3,35"
Engine	Honda GXH-50cc 4 stroke	
Petrol	Unleaded 98 - 0,8L	
Power	1,6kW at 7000rpm (2,2HP)	
Starter	Recoil	
Clutch	Centrifugal with anti-return system	
Pulling capacity	775 kg / 1708 lbs	540 kg / 1190 lbs
Lifting capacity	250 kg / 551 lbs	175 kg / 385 lbs
Speed	12 m/min - 39 ft/min	18 m/min - 59 ft/min
Capstan wheel	Ø 57 mm / 2,25"	Ø 85 mm / 3,35"
Dimensions	505 x 371 x 361 mm / 19.9 x 14.6 x 14.2 in	
Weight	19 kg / 41 lbs	

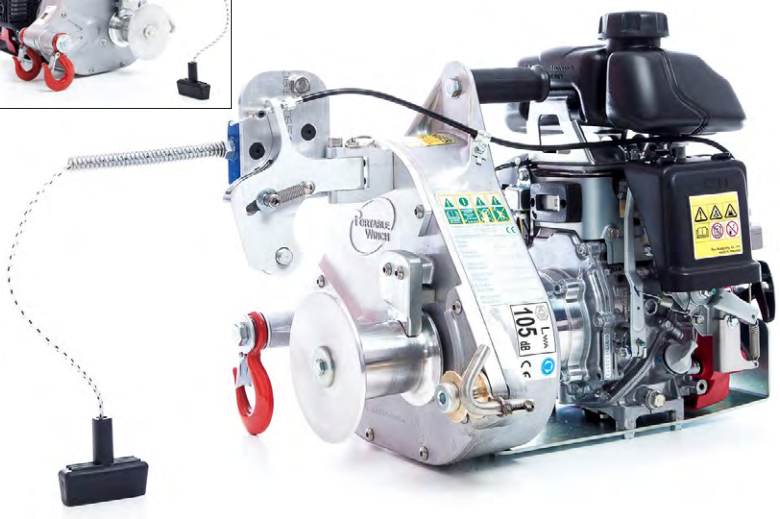

ELECTRICAL POWERED WINCH

Robust industrial electrical motor.
Controlled by a contactor linked to the rope pulling and holding system.Optional Ø57mm (2,24") capstan wheel which allow you to choose the desired speed/force ratio.
Possibility of multiplying the force by reeving using pulley blocks.

Catalog No.	HL-PCT1800

Decription	Ø 57 mm / 2,25"	Ø 85 mm / 3,35"
Motor	Electric Baldor (ABB) 1PH	
Power supply	230V 50Hz monophase with earth	
Power	0,56kW at 2.850rpm (0,75HP)	
Pulling capacity	1000 kg / 2204 lbs	820 kg / 1807 lbs
Lifting capacity	250 kg / 551 lbs	250 kg / 551 lbs
Speed	4,8 m/min - 17,7 ft/min	7,2 m/min - 23,6 ft/min
Capstan wheel	Ø 57 mm / 2,25"	Ø 85 mm / 3,35"
Dimensions	556 x 366 x 366 mm / 21.9 x 14.4 x 14.4 in	
Weight	27 kg / 59 lbs	

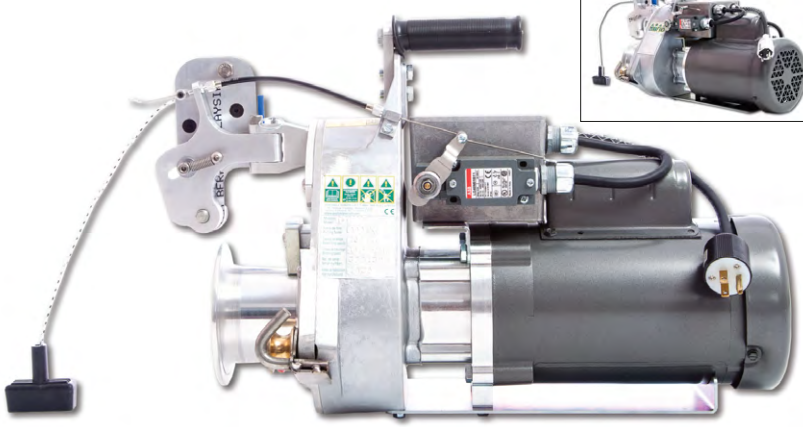

Catalog No.	Accessories
HL-1110	Capstan wheel Ø57mm (2,25") + Rope guide & 2 screws
HL-1100	Capstan wheel Ø85mm (3,35") + Rope guide & 2 screws

ANCHORING FOR WOODEN POLES, CONCRETE POLES, ...

ANCHORING SYSTEM FOR TREES AND POLES HAVING RUBBER PADS

This anchoring system allows the winch to be securely mounted to a tree or poles.
It is fitted with four rubber pads that prevent the system from slipping and protect the support. It is tightened by a strap that runs around the support and is tightened by a ratchet mechanism.
Includes a 3 meter (9 ft. 10 in.) sling and a tightening spanner.
Material : Steel with high resistance paint.
Weight: 7.2 kg / 15,8 lbs - Dimensions: 37 x 26 x 22 cm / 14.6 x 10.2 x 8.7 in.

Catalog No.	HL-1263

Ø50MM TOWING BALL ANCHOR

HECK-PACK ANCHORING SYSTEM FOR Ø 50mm TOWING BALL

This anchoring system clamps securely onto Ø50 mm (2") towballs and provides a fast, solid anchor point for the winch.
Material: Steel with high resistance paint (Heck-Pack) and zinc-plated steel (adapter)
Weight: 4.35 kg / 9,59 lbs
Dimensions: 44 x 24 x 8 cm / 17.3 x 9.4 x 3.1 in.

Catalog No.	HL-1266

ANCHORING ON PYLON OR METAL PROFILE

ANCHORING SYSTEM FOR PYLONS WITH 90° 'V'-SHAPED PROFILE STRUCTURE.

The pylon anchoring system is designed to be anchored directly on the profile structure of a pylon.
It is easy to install by one person, thanks to the magnets integrated into the back of the bracket, which hold it in place during installation.
Four aluminium anchoring wises grip on steel angles from 10 cm to 30 cm (4" to 11.8") wide - single or double thickness. These hooks are tightened by hand.
Material: Steel with with high resistance paint.
Weight: 7.3 kg / 16 lbs - Dimensions: 46 x 34 x 26 cm / 18.1 x 13.4 x 10.2 in.

Catalog No.	HL-1806

SUPPORT FOR HORIZONTAL PULLING

WINCH SUPPORT PLATE

This winch support plate is ideal for anchoring a winch to a tree, pole, vehicle or pylon. It keeps the winch stable and rotates 45 degrees to either side, automatically aligning itself with the load.
A rubber pad absorbs vibrations.
Material : Zinc-plated steel
Weight: 4.15 kg / 9,15 lbs - Dimensions: 44 x 27 x 14 cm / 17.3 x 10.6 x 5.5 in.

Catalog No.	HL-1268

SUPPORT FOR VERTICAL PULL

WINCH SUPPORTS FOR VERTICAL PULL

These winch stands was specifically designed for vertical pulling.
Fitted with an adjustable shelf, they provide a solid, stable support for the winch.
A removable V-shaped pulley mounted on ball bearings redirects the rope vertically. To install the rope, simply remove the T-handle and pulley, install the rope and then replace the pulley and T handle.
Note that these supports can also be used for horizontal pulling; in this case, the pulley will not be used.
Material: Steel with high-resistance paint.
Weight: 10.6 kg / 23 lbs - Dimensions: 58 x 43 x 22 cm / 22.8 x 16.9 x 8.7 in.

Catalog No.	HL-1264

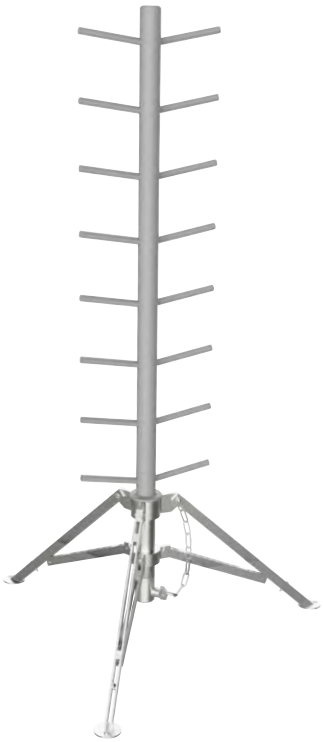

STICK RACK

FUNCTION AND USE

Stick racks are used in pairs for storing insulated sticks that are ready for use or have just been used.
In addition, they make it easier to check and maintain the sticks before use.

Catalog No.	**LW08-23** (sold individually)

BRACKET HOIST 63 KV AND 90 KV

FUNCTION AND USE

The bracket hoist for 63/90 kV is used for anchoring purposes:
- Equipped with a clevis and tenon pole, to fit spreader bar extensions.
- Or equiped with a cradle with hooks to replace a chain of insulators.

FEATURES

Insulating tube, fiberglass over the foam core.
Tube diameter 64 mm / 2 ½".
End fittings, stop pieces, shaft, made of corrosion protected metal.
Working Load Limit (WLL) : 50 daN / 110 lbs.

Catalog No.*	Désignation	Lenght (m)	Lenght (ft. In.)	Approx. weight (kg)	Approx. Weight (lbs)
LW08-24-MAT	Vertical mast	2,4	7 ft. 10 in.	5	11
LW08-24-FLE	Boom	3,6	11 ft. 9 in.	8,5	19

*Mast and boom sold without accessories

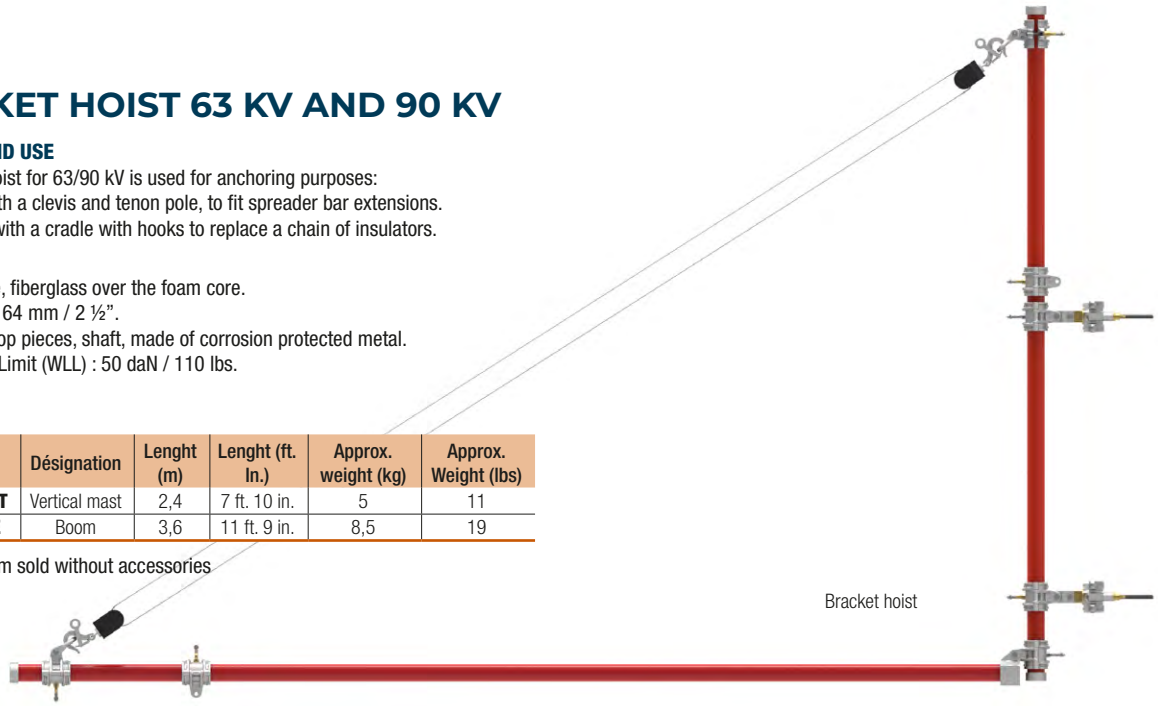

Bracket hoist

ACCESSORIES

Clevis and tenon adaptor, necessary for mounting a pole clamp on a saddle, made of corrosion protected metal.
Working Load Limit (WLL): 50 daN / 110 lbs.

Catalog No.	Designation
LW07-05	Adjustable pylon saddle
LW07-13-64	Pole clamp Ø64 mm (2 ½")
LW08-14-550 **LW08-14-1300**	WLL compatible rope block.
LW08-04-Ø-Length	WLL compatible insulating rope
LW07-14-TEN	Tenon
LW07-14-MAN	Shackle

Adjustable pylon saddle

Insulating rope

Pole clamp Ø64 mm (2 ½)

Rope hoist

Tenon

Shackle

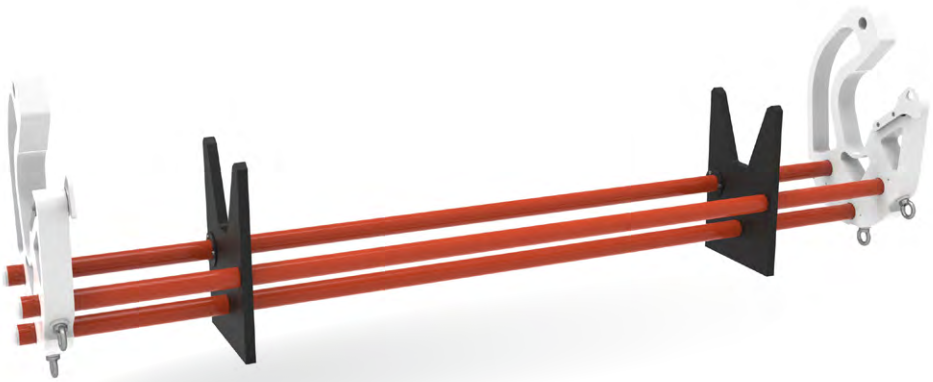

UNIVERSAL CRADLE FOR INSULATOR CHAINS

FUNCTION AND USE

In combination with insulating ropes (page 85), the universal cradle is used to keep an insulator chain straight when unattached it also facilitates deadend and suspension insulator changes.

Catalog No.	LW10-06

Catalog No.	Accessories
LW08-04-Ø-Length	Insulating rope (page 85)

FEATURES

- 3 Insulating tube, fiberglass over the foam core 39 mm (Ø 1 ½")
- 2 outer hoops, adjustable between 2 and 3.60 m (6 ft. 6 and 11 ft. 9 in.), with locking device and tube clamp at nominal torque of 3 Nm.
- 2 internal spacers.

External diameter of insulators: 255 to 380 mm (10" to 11")

Working load Limit (WLL) :
In a chain of anchored insulators : 220 daN / 485 lbs.
In a chain of insulators suspended : 220 daN / 485 lbs.
Approximate weight 17.5 kg

INSULATED CRADLE FOR 63/90 KV

FUNCTION AND USE

The cradle with hooks is used, in conjunction with the bracket hoist (sold separately page 94), to keep an insulator chain straight when unattached it also facilitates deadend insulator changes, on 63 and 90 kV structures.

FEATURES

The insulated cradle is a lifting accessory consisting of :

- Insulating tube, fiberglass over the foam core
- A suspension Insulating tube, fiberglass over the foam core.
- Three hooks and positioning rings made of insulating material.

Approximate weight of the set : 6 kg / 19,8 lbs
Working Load Limit (WLL) of the assembly : 80daN / 176,37 lbs

Catalog No.	LW10-07

Description		Dimensions (mm)	Dimensions (in)
Tie rod	Length between axes (mm)	1,136	0,045
	Suspension bar	0,99	39
	Hoops	32	1,3
Suspension bar	Length (mm)	1,70	66,9
	1 Schackle	39	1,5
Hoops	Total length (mm)	412	16,2
	Thickness (mm)	10	0,4
	Internal diameter (mm)	80	3,1
Adjustable positioning ring	Diameter (mm)	39	1,5
1 Schackle			
2 Pole clamp Ø 39 mm	Diameter (mm)	39	1,5

Suspension accessories made of corrosion-protected metal

Catalog No.	Accessories
LW07-13-39	Pole clamp Ø 39 mm (1 ½") page 80
LW07-14-MAN	Schakle
LW07-14-AXE	Axis

TUBE CLAMP

FUNCTION AND USE

Tube clamps are used to grip and hold a tube in position.
The 30/80 and 40/120 models are attached to the end of a sectional hexagonal stick.
The 60/125 and 100/200 models fit into the jaws of two conductor support stick.

FEATURES

The tube clamp is made of corrosion protected metal.

Model 30/80

Model 40/120

Model 60/125

Model 100/200

Catalog No.	Model	Clamping capacity (mm)	Clamping capacity (in)	Dimensions (mm)	Dimensions (in)	Working load Limit (WLL) daN.	Working load Limit (WLL) lbs.	Approx. Weight (kg)	Approx. Weight (lbs)
LW08-26-30/80	Model 30/80	Ø 30 to 40	Ø 1,18" to 1,5"	260 x 190 x 45	10.2 x 7.5 x 1.8	25	11	1,2	11
		Ø 50 to 80	Ø 1,97" to 3,15"						
LW08-26-40/120	Model 40/120	Ø 40 to 80	Ø 1,57" to 3,15"	300 x 240 x 45	11.8 x 9.4 x 1.8	25	12	1,6	12
		Ø 90 to 120	Ø3,54" to 4,72"						
LW08-26-60/125	Model 60/125	Ø 60 to 125	Ø2,36" to 4,92	320 x 250 x 180 with pole clamp Ø 64 mm	12.6 x 9.8 x 7.1 with pole clamp Ø 64 mm	100	13	3	13
LW08-26-100/200	Model 100/200	Ø 100 to 200	Ø3,94 to 7,87	420 x 340 x 130 with pole clamp Ø 64 mm	16.5 x 13.4 x 5.1 with pole clamp Ø 64 mm	150	14	6,3	14

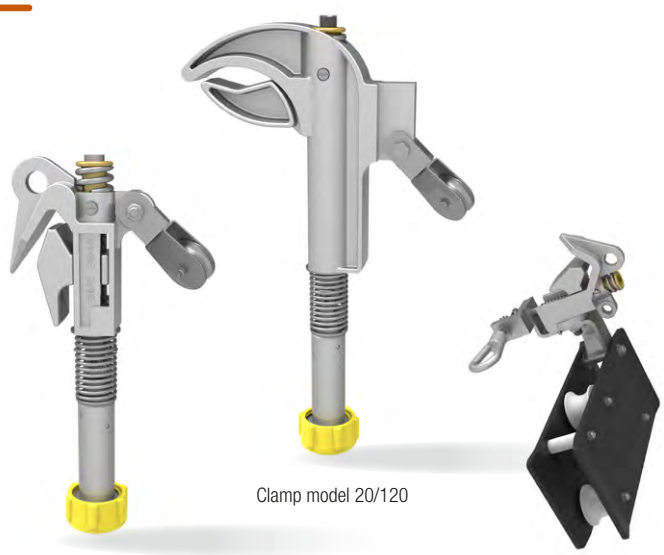

Clamp model 15/60

Clamp model 20/120

Guide carriage

JUMPER REMOVAL AND INSTALLATION DEVICE

FUNCTION AND USE

In association with a 39 mm diameter sectional hexagonal stick ,the jumper removal and installation device is used to remove or install a flexible connection and guide it along the pole.

FEATURES

Guide carriage :

- Flanges and guide pulleys made of synthetic material,
- Screws and gripping connector with angle gear, made of corrosion- protected metal.

Clamping capacity limited to flexible connections with a cross-section of 570 mm² (288 KCMIL) or less.
Tightening torque (for installation): 3 daN.m / 22.1 ft.lbs
Dimensions: 330 x 330 x 230 mm / 13.0 x 13.0 x 9.1 in
Approximate weight: 3.2 kg / 7,2 lbs
Working Load Limit (WLL): 35 daN / 77,16 lbs

Pulley grip connector :

- Clamp, cardan shaft, end cap and pulley fitting, made of corrosion protected metal.
- swivel pulley for 8 mm (1/3") insulating rope.

Catalog No.	Model	Tightening torque (daN.m)	Tightening torque (lbs.ft)	Lenght (mm)	Lenght (ft. In.)	Approx. Weight (kg)	Approx. Weight (lbs)
LW08-27-15/60	Clamp model 15/60	3	22.1	350	1 ft. 1 in.	2,8	6
LW08-27-20/120	Clamp model 20/120	3	22.1	440	1 ft. 5 in.	3,6	8
LW08-27-CG	Guide carriage	-	-	330	1 ft. 0 in.	3,2	7

BUSBAR DEVICE

FUNCTION AND USE

The busbar device is used to hold and guide the tube of a busbar with a ø 64 mm (2 ½") conductor support stick.
The movement of the assembly is ensured by an insulating rope «returned» by a handling pulley positioned at the head of the conductor support stick.
This device is always used in pairs.

Handling pulley

FEATURES

Device made of corrosion protected metal.
Clamp :
- Clamping capacity :
  Model 1: ø 60 to 80 mm (ø2,36" to 3,15").
  Model 2: ø 90 to 120 mm (ø 3,54" to 4,72") .
- Tighting by hook (ref LW11-15 page 105).

Flat pole clamp, ø 64 mm (2 ½"), bolted to the clamp.
Handling ring screwed to the upper jaw of the clamp.
Handling Pulley made of corrosion protected metal.

Catalog No.	Model	Dimensions (mm)	Dimensions (in)	Approx. Weight (kg)	Approx. Weight (lbs)	Working load Limit (WLL) daN.	Working load Limit (WLL) lbs.
LW08-28-1	Model 1	270 x 220 x 150	10.6 x 8.7 x 5.9	2,2	5	150	331
LW08-28-2	Model 2	300 x 250 x 160	11.8 x 9.8 x 6.3	2,5	6	150	331
LW08-28-PM	Handling pulley	340 x 170 x 85	13.4 x 6.7 x 3.3	3	7	80	176

ANTI-ROTATION BAR

FUNCTION AND USE

The assembly prevents rotation of the basket attached to the helicopter.
Attached with a 35mm (1 3/8 ") diameter insulating rope (page 85).

FEATURES

Anti-rotation bar consisting of :
- Two clamps, each consisting of two half-shells made so as not to deteriorate the insulated 35mm (1 3/8") rope.
  Dimensions of the clamp: 75 x 50 x 40 mm / 3.0 x 2.0 x 1.6 in,
  Yield strength (Re) of the material is greater than or equal to 190 MPa (27557 PSI).
- Four orange-coloured synthetic material rods of Ø15 mm (0,59").

They are connected to the clamps and form a deformable diamond shape rhombus.

Catalog No.	Total Lenght	Insulating Length (m)	Insulating Lenght (ft. In.)
LW08-29-900	Vertical mast	2,4	7 ft. 10 in.
LW08-29-1300	Boom	3,6	11 ft. 9 in.

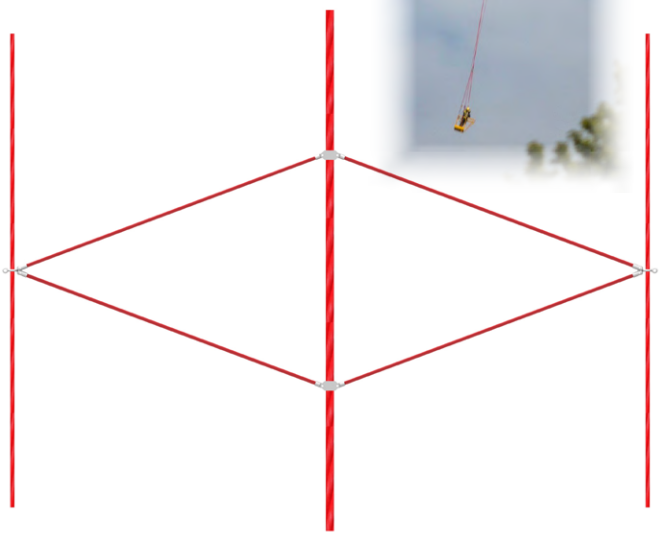

Support tube

JUMPER HOLDER

FUNCTION AND USE

The jumper holder is used to handle and guide a jumper when installing or removing it.
The jumper holder allows the jumper to remain in a horizontal position.
It can be operated from the ground using insulating ropes.

FEATURES

The jumper holder consists of :

- An Insulating tube, fiberglass over the foam core ø 39 mm (1 ½"), length 3.60m (11 ft. 9 in.)
- Two steel forks, each with :
- Two adjustable spindles in position,
- Jumper clamp,
- A mooring bracket for insulating rope,
- Three pole clamp ø 39mm (2") in light alloy,
- Two clamps made of corrosion protected steel,
- Two light alloy pulleys with steel clamps protected against corrosion.

Dimensions :

- length between forks: variable depending on the length of the strap,
- width: 0.30 m / 11,8"
- height: 0.85 m / 33,5"

Approximate weight: 12 kg / 26,46 lbs
Working Load Limit (WLL): 50 daN / 110 lbs

Catalog No.	Designation
LW08-30	Jumper holder
Contient	
LW08-30-FOU	Fork
LW08-30-EPB	Jumper clamp
LW08-30-PEF	Pulley with clamp
LW08-30-TS	Support tube

Fork

Pulley with clamp

Jumper clamp

HOOK FOR INSULATOR CHAIN

FUNCTION AND USE

Attached to an insulating rope, the insulator chain hook is used for handling an insulator chain. It is installed between two insulators in the chain using the guide pin attached to an insulating pole with a universal end fitting.

FEATURES

Synthetic hook with a guide hole for installation and a hole for attaching the service rope.
Dimensions: 340 x 310 x 40 mm / 13.4 x 12.2 x 1.6 in.
Approximate weight: 2.1 kg / 4,6 lbs
Guide pin with universal end fitting made of corrosion-protected metal and shaft made of fibre-glass reinforced plastic.
Total length: 145 mm / 5,71"
Shaft diameter: 10 mm / 0,39"
Approximate weight: 0.15 kg / 0,33 lbs
Maximum working load: 250 daN / 551 lbs

Catalog No.	**LW08-31**

Hook

Guide pin

BLACK INSULATOR TRAY

FUNCTION AND USE

The insulator tray is used to hold a suspension chain released from its top anchor point.
It can also be used to create an equilibrium on a double chain suspension assembly, when one of the chains has been removed.

FEATURES

Tray made of synthetic material.
Sling made of insulated rope, diameter 14 mm / .55" (Page 85)

Catalog No.	Designation	Dimensions (mm)	Dimensions (.in)	Inside Ø of the tray (mm)	Inside Ø of the tray (in)	Working load Limit (WLL) daN.	Working load Limit (WLL) lbs	Approx. weight (kg)	Approx. weight (lbs)
LW10-04-1	Model 1	280 x 295 x 80	11.0 x 11.6 x 3.1	265	10,43	100	220	1	2,2
LW10-04-2	Model 2	330 x 335 x 80	13.0 x 13.2 x 3.1	295	11,61			1,1	2,4

WHITE TRAY FOR INSULATOR

FUNCTION AND USE

After the mechanical tension of a suspended conductor or bundle has been taken up, the insulator tray can be used to hold the suspension chain uncoupled from its upper attachment, thus allowing an intervention on the grounded side.
It also permits the replacement of the insulator string.
It can also be used to create an equilibrium on a double chain suspension assembly, when one of the chains has been removed.

FEATURES

Tray made of insulating synthetic material.
3 sets of 4 plastics centring wedges, suitable for all types of insulators.
Sliders and adjusting nuts made of corrosion- protected metal.
Insulated rope loop slings and carabiners are not supplied.
Outer diameter of the tray: 430 mm / 16,93"
Inner diameter of the plate: 385 mm / 15,16"
Working load Limit (WLL) : 240 daN / 529 lbs.
Approximate weight: 4 kg / 8,82 lbs.

Catalog No.	**LW10-05**

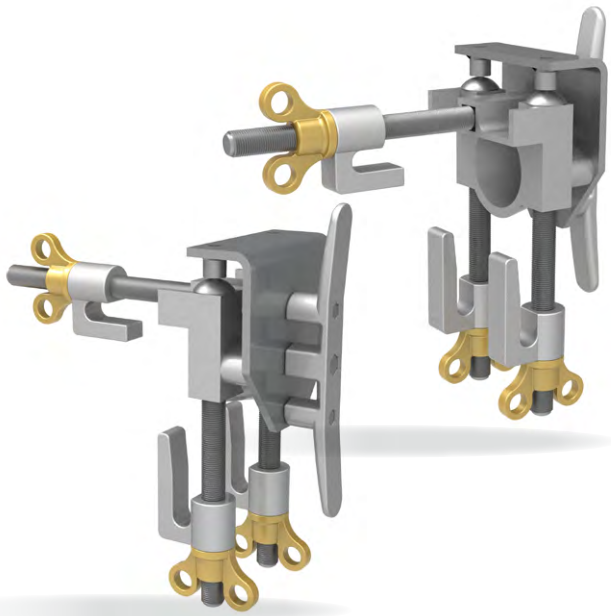

PYLON CLEAT

FUNCTION AND USE

The pylon cleat is attached to the leg of a pylon and is used as an anchoring point for rope.
When the saddle is to be used on angle-iron tower legs larger than 100 mm (4"), the fixing rods must be equipped with appropriates hooks and washers.

FEATURES

Cleat, base, removable fixing rods, hooks and wing nuts, in corrosion protected metal.
Dimensions: 350 x 300 x 260 mm / 13.78 x 11.81 x 10.24 in
Dimensions of the angles that can receive the saddle: 40 to 190 mm / 1,57" to 7,48"
Working Load Limit (WLL) in traction: 240 daN /529 lbs.
Approximate weight: 4 kg / 8,8 lbs.

Catalog No.	**LW08-33**

SCAFFOLDING CLEAT

FUNCTION AND USE

The scafolding cleat is used to create an anchoring point on a metalic scafolding.

FEATURES

Made in corrosion-protected metal.
Dimensions: 100 x 200 x 300 mm / 3.9 x 7.9 x 11.8 in
Clamping capacity: 30 to 50 mm diameter / 1,18” to 1,97”
Working Load Limit (WLL) : 60 daN / 132 lbs
Approximate weight: 3.5 kg / 7,7 lbs
Tightening torque on installation: 1.8 daN.m / 15.95 lb.ft

Catalog No.	LW08-34

SELF-LOCKING PULLEY

FUNCTION AND USE

Placed on a conductor, the self-locking pulley can be used as an handling device.

FEATURES

The metal parts are protected against corrosion.
Jaws lined with anti-slip material.
Sheave to protect the insulating rope.
Tightening capacity: rope with an external diameter of between 25 (1”) and 40 mm (1,57”).
Dimensions (L x W x H): 110 x 280 x 360 mm / 4.3 x 11 x 14.2 in.
Approximate weight: 2.2 kg / 4,85 lbs
Working Load Limit (WLL): 80 daN (176 lbs) on one strand

Catalog No.	LW08-35

UNIVERSAL TOOLS

UNIVERSAL ADAPTER FOR CLAMPSTICK

FUNCTION AND USE

Attached to the clampstick, by the hook. This adapter allows the conversion of any Clampstick to be used as a universal stick for tool accessories.

FEATURES

Universal end cap, fixing screw and handle, made of corrosion protected metal.
Dimensions: 120 x 48 x 45 mm / 4.7 x 1.9 x 1.7 in.
Approximate weight: 0.15 kg / 0,3 lbs.

Catalog No.	LW11-01

UNIVERSAL ADAPTER

FUNCTION AND USE

The Universal Adapter allows a different orientation for universal tools than if they were attached directly to the universal stick.Useful for working in limited access areas.

FEATURES

Curved universal end cap and fixing screw, made of corrosion protected metal.
Dimensions: 75 x 55 x 33 mm / 3 x 2.1 x 1.3 in.
Approximate weight: 0.15 kg / 0,3 lbs.

Catalog No.	LW11-02

RING FOR PREFORMED REPAIR SLEEVES

FUNCTION AND USE

The helix sleeve ring is used to fit preformed repair sleeves, it is also designed to facilitate the application and removal of preformed conductor ties on pin insulators.

FEATURES

Ring: end cap and body, made of corrosion protected metal.
Length: 210 mm / 8,27”
Approximate weight: 0.25 kg / 0,55 lbs.

Catalog No.	LW11-03

LOCATING PIN

FUNCTION AND USE

The Locating Pin is generally used for :
Alignment of holes, so that a bolt or pin can be inserted.

FEATURES

Universal end cap and angled body, made of corrosion protected metal.
Dimensions: 140 x 105 x 20 mm / 5.5 x 4.1 x 0.78 in.
Maximum diameter D: 19 mm / .75”
Minimum diameter d: 6 mm / .24”
Approximate weight: 0.3 kg / 0,6 lbs.

Catalog No.	LW11-04

DOUBLE LOCATING PIN

FUNCTION AND USE

The double locating pin is used to align the holes in the terminal pads to facilitate the installation of the clamping bolts.

FEATURES

Universal end cap and pin, made of corrosion protected metal.
Dimensions: 170 x 150 x 70 mm / 6.7 in x 5.9 x 2.75 in.
Diameter of both spindles: 15 mm / .59”
Approximate weight: 0.65 kg / 1,43 lbs.

Catalog No.	LW11-05

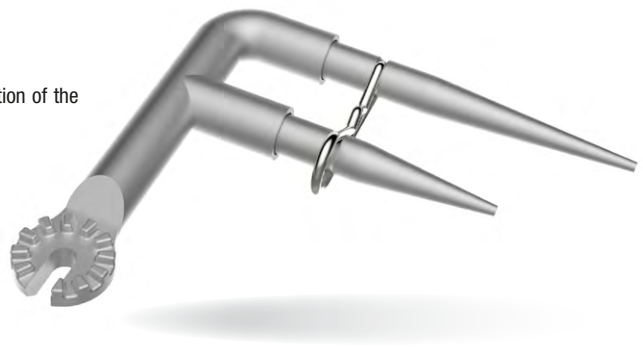

COPPER CONDUCTOR CLEANING BRUSH

FUNCTION AND USE

The copper conductor brush is used to clean copper conductors before making an electrical connection.
To ensure that the conductor is completely cleaned, the brush must be turned 180°.
It can be used with a universal stick or by hand.

FEATURES

Universal light alloy tip. Open cylindrical body, made of synthetic material, fixed on a metal swivel support protected against corrosion.
The abrasive patch is attached to the inside of the body.
Dimensions: 120 x 110 x 65 mm / 4.8 x 4.3 x 2.6 in
Approximate weight: 0.3 kg / 0,6 lbs

Catalog No.	LW11-06

ALUMINUM CONDUCTOR CLEANING BRUSH

FUNCTION AND USE

The aluminium conductor brush is used to clean the aluminum conductors before making an electrical connection. A neutral grease may be applied to help slow the oxidisation of the aluminun conductors whilst being cleaned.
To ensure that the conductor is completely cleaned, the brush must be turned 180°.
It can be used with a universal stick or by hand.

FEATURES

Universal light alloy tip.
Open cylindrical body made of synthetic material, mounted on a corrosion protected metal swivel bracket.
Metal brush, glued inside the removable body. Dimensions: 120 x 110 x 65 mm / 4.7 x 4.3 x 2.6 in.
Approximate weight: 0.3 kg / 0,6 lbs

Catalog No.	LW11-07

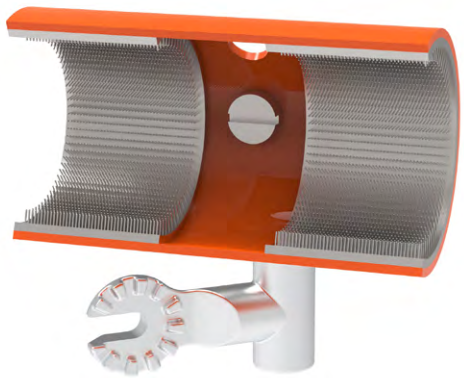

CLAMPING BRUSH FOR CONDUCTORS

FUNCTION AND USE

Used with a clamp stick or by hand, the clamping brush is used to clean conductors before making an electrical connection. A neutral grease may be applied to help slow the oxidisation of the aluminun conductors whilst being cleaned.

FEATURES

Dimensions: 378 x 140 x 50 mm / 14.9 x 5.5 x 2.0 in.
Approximate weight: 0.5 kg / 1,1 lbs.

Catalog No.	LW11-08

SPINDLE BRUSH

FUNCTION AND USE

The spindle brush is used to clean the pins of dead end clamps or arial switches equiped with aluminum pins before making an electrical connection.
The cleaning is done by rotating the brush on the pin, which is coated with neutral grease. It can be used with a universal stick or by hand.

FEATURES

Open cylindrical body, made of metal protected against corrosion. Metal brush, the assembly is screwed onto the bracket with a standard 12.7 mm (1/2 inch) socket, made of corrosion protected metal.
Total length: 150 mm / 5,91” - Internal length of the card: 100 mm / 3,94”
External diameter: 48 mm / 1,89” - Approximate weight: 0.3 kg / 0,6 lbs

Catalog No.	LW11-09

V-BRUSH

FUNCTION AND USE

The V-brush is used for cleaning copper or aluminum conductors.
It can be used with a universal stick or by hand.

FEATURES

Universal light alloy tip.
Removable swabs made of steel protected against corrosion.
Dimensions (L x W): 200 x 100 mm / 7.9 x 3.9 in.
Removable swab diameter: 40 mm / 1,57”
Approximate weight: 0.16 kg / 0,35 lbs

Catalog No.	LW11-10

INSULATOR BRUSH

FUNCTION AND USE

The insulator brush is used for the cleaning of insulating columns of busbar supports and substation equipment. This brush is designed to be used without water.

FEATURES

Universal tip in bronze or light alloy. Synthetic shaft.
Natural or synthetic fibre bristles.
Total length: 0.40 m / 1’3” - Diameter of the shaft: 32 mm / 1 ¼”
Length of the brush: 0,18 m / 7” - Diameter of the brush: 0,15 m / 6”
Approximate weight: 0,5 kg / 1,1 lbs

Catalog No.	LW11-11

OIL CAN

FUNCTION AND USE

The oil can may be used for the lubrication of devices such as disconnectors, circuit breakers, and arial switches.
Filled with degreaser it can help with the freeing of nuts, bolts and pins.
It can be used with a universal stick or by hand.

FEATURES

Universal spout with clamp, control ring, flexible spout and rigid spout, made of corrosion protected metal.
Plastic tank, capacity: 200 or 250 cm3 / 6,76 or 8,45 oz
Length of flexible spout: 200 mm / 8”
Length of rigid spout: 150 mm / 6”
Approximate weight: 0.35 kg / 0,77 lbs

Catalog No.	LW11-12

RATCHET WRENCH

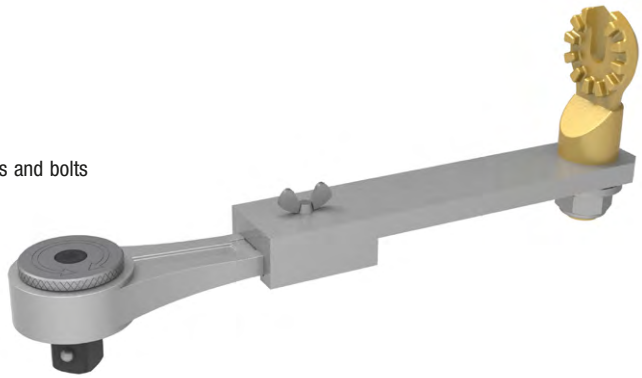

FUNCTION AND USE

The ratchet wrench is used for tightening and loosening, screwing and unscrewing nuts and bolts used with removable sockets.

FEATURES

Universal attachment, spring and ratchet spanner, made of corrosion protected metal.
The ratchet accepts standard 12.7 mm (1/2 inch) sockets.
Dimensions: 270 x 95 x 45 mm / 10.6 x 3.7 x 1.8 in.
Approximate weight: 0.5 kg / 1,1 lbs

Catalog No.	LW11-13

BOLT HEAD WRENCH

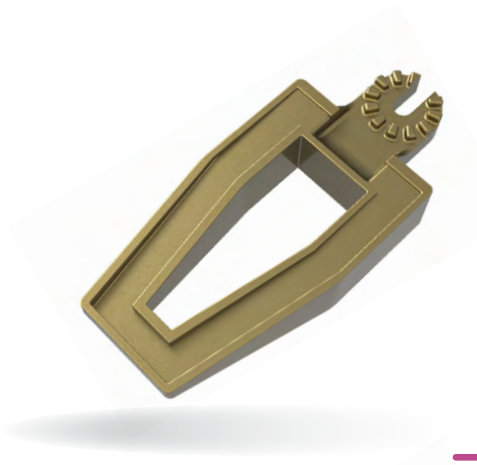

FUNCTION AND USE

The bolt head wrench is used to secure the square or hexagonal head of a bolt while tightening.
It can also be used on a nut.

FEATURES

Dimensions (L x W x D): 165 x 73 x 27 mm /6.5 x 2.9 x 1.1 in.
Holding capacity: 19 to 34 mm / ¾” to 1,34”
Approximate weight: 0.5 kg / 1,1 lbs

Catalog No.	LW11-14

HOOK

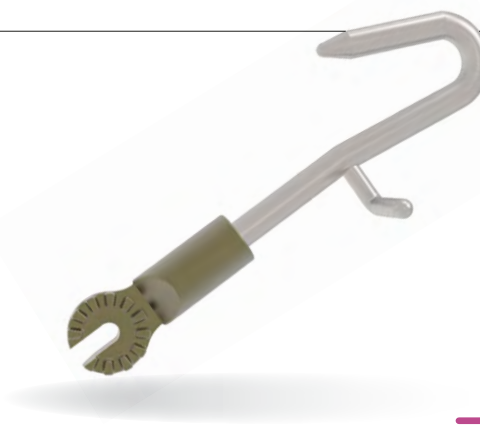

FUNCTION AND USE

The hook is used to tighten or loosen gripping connectors.

FEATURES

Universal end cap and hook, made of metal protected against corrosion.
Dimensions: 205 x 90 x 50 mm / 8.1 x 3.5 x 2.0 in.
Approximate weight: 0.35 kg / 0,77 lbs.

Catalog No.	LW11-15


Crochet ouvert

RETRACTABLE HOOK

FUNCTION AND USE
The retractable hook is generally used for screwing or unscrewing parts with a ring, when the length of the clamp stick is insufficient or its mass hampers the operator's precision.

FEATURES
Dimensions (L x W): 200 x 40 mm / 7.9 x 1.6 in.
Approximate weight: 0.5 kg / 1,1 lbs

Catalog No.	LW11-16

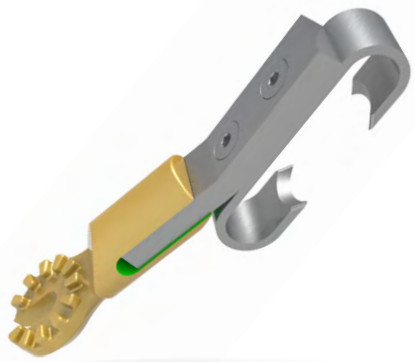

DOUBLE HOOK

FUNCTION AND USE
Used with a universal stick the double hook can help with the moving of conductors away or towards there permanant or provisonal position the conductors must be triangulated before using this tool.

FEATURES
Universal end cap and double hook, made of metal protected against corrosion.
Dimensions: 135 x 45 x 33 mm / 5.3 x 1.8 x 1.3 in.
Approximate weight: 0.25 kg / 0,5 lbsg

Catalog No.	LW11-17

ROTARY PRONG

FUNCTION AND USE
The rotary prong is used for placing insulator ties with looped ends.
Can also be used for moving, putting on and taking off light accessories with a ring, such as a come along clamp.

FEATURES
Universal end cap and swivel hook, made of metal protected against corrosion.
Dimensions: 115 x 105 x 20 mm / 4.5 x 4.1 x 0.8 in.
Approximate weight: 0.18 kg / 0,4 lbs

Catalog No.	LW11-18

UNIVERSAL COTTER KEY PULLER

FUNCTION AND USE
The cotter key puller is equiped with a fine point to facilitate the removal of the locking pins from the ball joints of insulator chains and their accessories.

FEATURES
Universal tip, bent shaft and point, made of metal protected against corrosion.
Dimensions: 130 x 70 x 20 mm / 5.1 x 2.8 x 0.8 in.
Approximate weight: 0.17 kg / 0,4 lbs

Catalog No.	LW11-19

PIGS TAIL COTTER KEY PULLER

FUNCTION AND USE

The pigs tail cotter key puller is used to remove the locking pins from the ball socket of insulator chains and their accessories, supported by the ball joint housing. It's unique form allows for ease of use with a turning motion.

FEATURES

Universal tip, counter-bent shaft and point, made of metal protected against corrosion.
Dimensions: 130 x 60 x 35 mm / 5.1 x 2.4 x 1.4 in - Approximate weight: 0.17 kg / 0,37 lbs

Catalog No.	**LW11-20**

PIN PUSHER

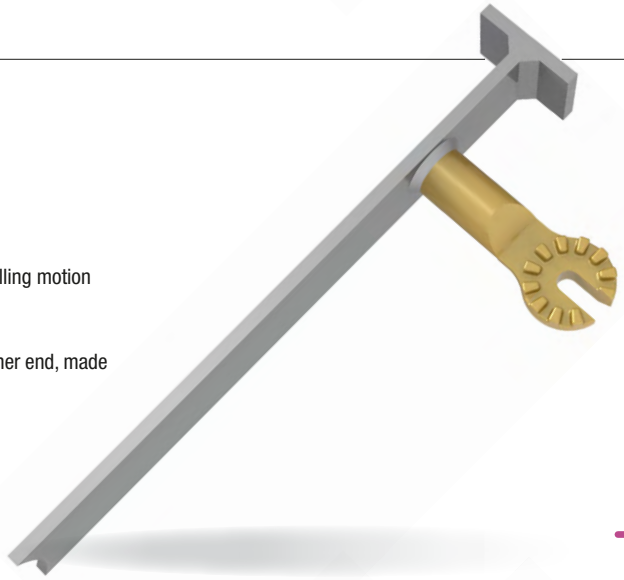

FUNCTION AND USE

The pin pusher is used to push out a pin with its straight blade removing the need of a pulling motion
The use of a hammer striking the head facilitates this operation.

FEATURES

Universal attachment, straight blade body with a concave end and a striking head at the other end, made of corrosion protected metal.
Dimensions: 250 x 30 x 100mm / 9.8 x 1.2 x 3.9 in.
Approximate weight: 0.4 kg / 0,88 lbs

Catalog No.	**LW11-21**

WINGED COTTER KEY PULLER

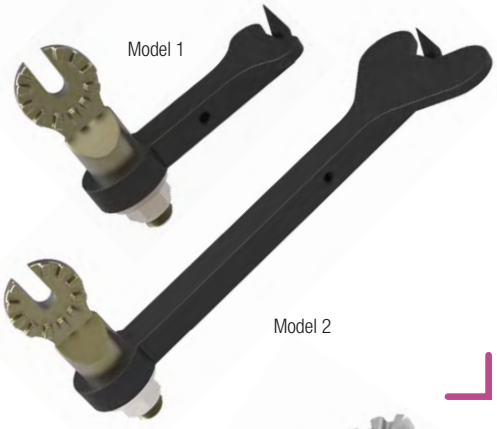

FUNCTION AND USE

The wing cotter key is used to remove the locking pins from the ball joints of insulator chains and their accessories.

FEATURES

Universal tip, rotating lug body and tip, made of corrosion protected metal.

Catalog No.	**LW11-22-PM**
Catalog No.	**LW11-22-GM**

SPRING LOADED COTTER KEY

FUNCTION AND USE

The spring loaded pin remover is used to remove the locking pins from the ball joints of insulator chains and their accessories.
Compression and release of the spring facilitates the extraction of the pin.
Hammer-like action makes it extremely useful in pulling out stuck cotter keys

FEATURES

Universal tip, body, sliding rod and tip, spring, in corrosion protected metal.
Dimensions: 210 x 33 x 20 mm / 8.3 x 1.3 x 0.8 in - Approximate weight: 0.3 kg / 0,6 lbs

Catalog No.	**LW11-23**

BALL SOCKET ADJUSTER

FUNCTION AND USE

Used in controlling the adapter between clevis clamps and ball and socket insulator pins.

FEATURES

Universal end cap and corrosion protected metal body.
Dimensions (L x W x D): 135 x 83 x 24 mm / 5.3 x 3.3 x 0.9 in.
Opening: 32 mm / 1 ¼”
Approximate weight: 0.35 kg / 0,77 lbs

Catalog No.	LW11-24

ROTATING BALL-SOCKET ADJUSTER

FUNCTION AND USE

The rotating ball-socket fork is used to secure a ball socket
It facilitates the housing of a ball socket by keeping it permanently in the horizontal position.

FEATURES

Universal, rotating ball-socket fork, made of metal protected against corrosion.
Dimensions: 160 x 90 x 20 mm / 6.3 x 3.5 x 0.8 in.
Approximate weight: 0.35 kg / 0,77 lbs

Catalog No.	LW11-25

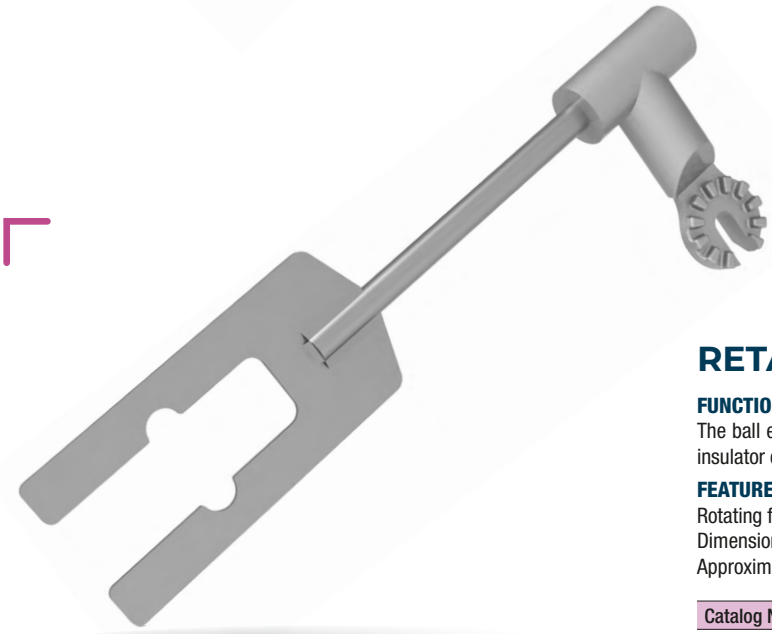

RETAINING FORK

FUNCTION AND USE

The ball eye holding fork is used to secure a ball eye when installing or removing an insulator chain.

FEATURES

Rotating fork and universal metal tip protected against corrosion.
Dimensions: 260 x 100 x 20 mm / 10.2 x 3.9 x 0.8 in.
Approximate weight: 0.5 kg / 1,1 lbs

Catalog No.	LW11-26

HOLDING FORK

FUNCTION AND USE
The holding fork used to immobilise a ball-socket or to guide its movement during its attachment or detachment.
Used to align and hold ball socket fittings for removal of cotter pin.

FEATURES
Universal end cap and V-shaped body with two notched arms, made of corrosion protected metal.
Dimensions: 220 x 60 x 33 mm / 8.7 x 2.4 x 1.3 in.
Maximum branch spacing (mm): 45 / 1,77”
Approximate weight (kg): 0.4 / 0,88 lbs

Catalog No.	LW11-27

FORK FOR BALL-SOCKET

FUNCTION AND USE
The fork for ball-socket is used to immobilise a ball-socket or to guide its movement during its attachment or detachment.

FEATURES
Universal end cap and V-shaped body with two notched arms, made of corrosion-protected metal.
Dimensions: 235 x 77 x13 mm / 9.3 x 3.0 x 0.5 in.
Branch spacing (mm): 32 to 48 / 1,26» to 1,89»
Approximate weight (kg): 0.35 / 0,77 lbs

Catalog No.	LW11-28

HEXAGONAL TIP

FUNCTION AND USE
The hexagonal end piece allows, the installation or removal of a shunting device.

FEATURES
Universal and hexagonal nipple with ball retainer, made of corrosion protected metal.
Overall length: 160 mm / 6,3”
Approximate weight: 0.3 kg / 0,66

Catalog No.	LW11-29

UNIVERSAL SOCKET

FUNCTION AND USE
The universal socket is used to hold and operate wire brushes or paint brushes with a handle diameter that is compatible with the socket’s capacity.

FEATURES
Universal end cap and socket, made of corrosion-protected metal.
Total length: 95 mm / 3,75”
Locking screw socket :
- Inner diameter: 16 mm / 0,63”
- Outer diameter: 23 mm / 0,91”
- Approximate weight: 0.15 kg / 0,3 lbs

Réf.	LW11-30

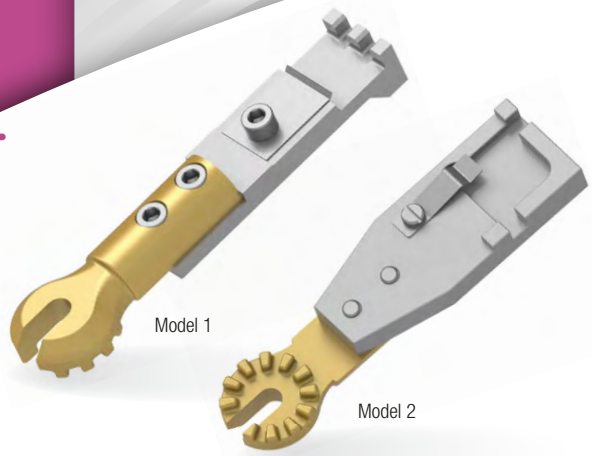

COTTER KEY TOOL

FUNCTION AND USE

The Cotter key is used to insert the locking pins of the ball joints of the insulator chains and their accessories.
The opposite side of the universal end cap can be used as a hammer to complete the insertion of the pins.

FEATURES

Universal bit, pin holder and retaining blade, made of corrosion-protected metal.

Catalog No.	Model	Dimensions (mm)	Dimensions (in)	Approximate weight (kg)	Approx. weight (lbs)
LW11-31-1	Model 1	150 x 26 x 20	5.9 x 1 x 0.7	0,3	0,7
LW11-31-2	Model 2	145 x 38 x 20	5.7 x 1.5 x 0.7	0,3	0,8

16 GAUGE COTTER KEY

FUNCTION AND USE

The Cotter key is used to insert a locking pin on larger insulators with its curved blade.
The use of a hammer acting on the striking head facilitates the operation of inserting the pins completely.

FEATURES

Universal bit, straight blade body with a curved blade at one end and a striking head at the other, made of corrosion protected metal.
The curved blade is fitted with a guide that prevents the pin from being crushed,
Dimensions: 255 x 85 x 80 mm / 10 x 3.3 x 3.1 in.
Approximate weight: 0.5 kg / 1,1 lbs

Catalog No.	**LW11-32**

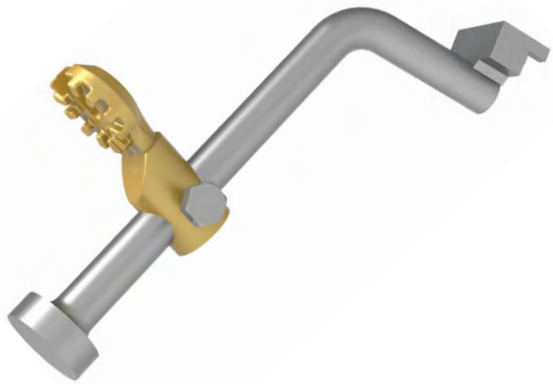

ANGLED COTTER KEY TOOL

FUNCTION AND USE

The angled cotter key is used to insert the locking pins of the ball joints of long-skirted insulator chains.
The use of a hammer, acting on the striking head, can facilitate the installation of the pins.

FEATURES

Universal, sliding and locking end cap, made of corrosion protected metal.
Corrosion-protected metal body, comprising :
- A punching head,
- A bent rod,
- A pin holder with two notches.

Dimensions: 180 x 115 x 30 mm / 7.1 x 4.5 x 1.2 in.
Approximate weight: 0.3 kg / 0,66 lbs

Catalog No.	**LW11-33**

COTTER KEY DRIVER

FUNCTION AND USE

The cotter key driver is used to insert pins with an external step to lock joint pins. The striking head is used as a hammer, to complete the installation of the pins.

FEATURES

Universal rotating metal nipple protected against corrosion.
Corrosion-protected metal body, comprising :

- A punching head,
- A bent rod,
- A sliding pin holder.

Dimensions: 150 x 75 x 25 mm / 5.9 x 2.9 x 1.0 in.
Approximate weight: 0.30 kg / 0,66 lbs

Catalog No.	LW11-34

COTTER KEY PUSHER

FUNCTION AND USE

The pinning and unpinning device is used to :

- Push back, the pins with its straight blade, without extracting them.
- Use the curved blade to reposition the pins to their original position.

FEATURES

Universal tip, straight and curved blade body, made of metal protected against corrosion.
Dimensions: 235 x 120 x 25 mm / 9.3 x 4.7 x 1 in.
Approximate weight: 0.45 kg / 1 lbs

Catalog No.	LW11-35

GAUGE FOR DISTRIBUTION CONDUCTORS (GAUGE IN METRIC)

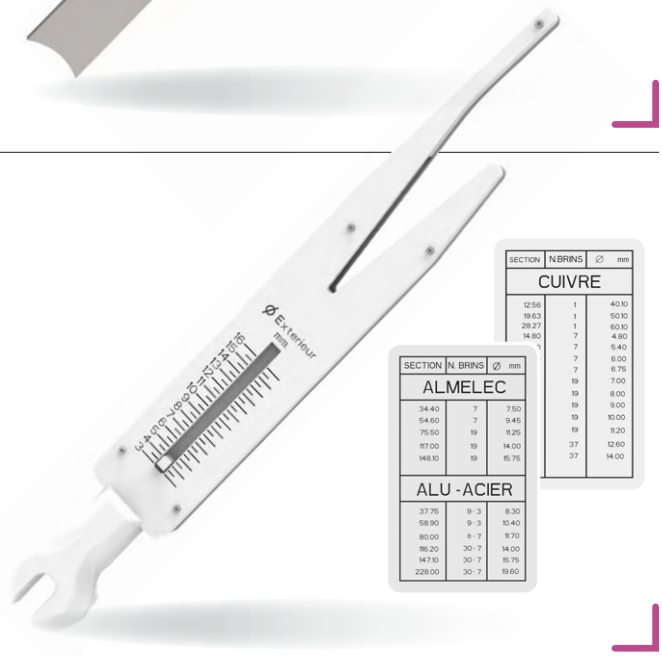

FUNCTION AND USE

The gauge is used to measure the diameter of a conductor.
A table supplied with the tool indicates the cross-sectional area corresponding to the diameter.

FEATURES

Universal end cap, fixed graduated scale and movable slider, made of synthetic material.
Direct reading scale for conductor diameters between 3 and 16 mm (0,12” to 0,63”).
Dimensions: 270 x 35 x 17 mm / 10.6 x 1.4 x 0.7 in.
Approximate weight: 0.3 kg / 0,66 lbs

Catalog No.	LW11-36

GAUGE FOR TRANSMISSION CONDUCTORS (GAUGE IN METRIC)

FUNCTION AND USE

The gauge is used to measure the diameter of the conductors and to deduce, if necessary, their cross-section. A table engraved in the body of the gauge gives the correspondence between diameter and cross-section for the most common conductors.

FEATURES

Universal tip and slider, made of corrosion-protected metal. Graduated body made of synthetic material. Direct reading scale for conductor diameters between 6 and 60 mm (0,24” to 2,36”).
Dimensions: 270 x 190 x 15mm / 10.6 x 7.5 x 0.6 in.
Approximate weight: 0.50 kg / 1,1 lbs

Catalog No.	LW11-37

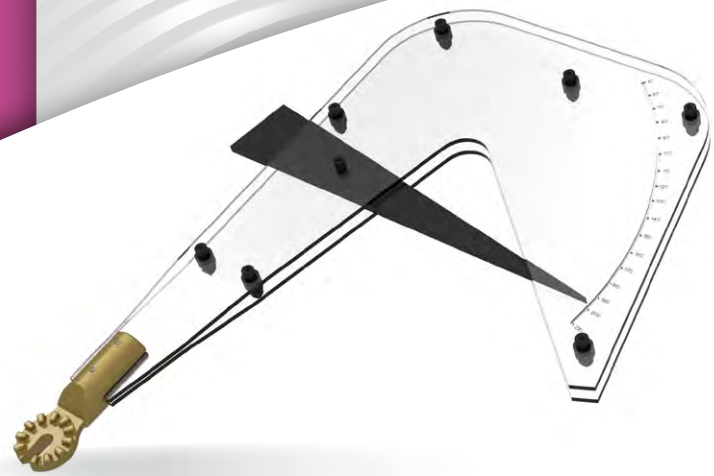

BUSBAR GAUGE (GAUGE IN METRIC)

FUNCTION AND USE

The busbar gauge is used to measure the diameter of the tubes that make up the busbars.

FEATURES

Universal metal tip protected against corrosion. Graduated body and slider in synthetic material. Direct reading of tube and busbar diameters from 30 to 210 mm (1,18" to 8,27").
Dimensions: 400 x 280 x 15 mm / 15.7 x 11 x 0.6 in.
Approximate weight: 0.5 kg / 1,1 lbs

Catalog No.	LW11-38

BINDING WIRE BLADE

FUNCTION AND USE

The binding wire blade is used to spread one of the wires wrapped aroud the groove of a rigid insulator. This facilitates the cutting of the binding wire with a tie wire cutter (ref. LW03-13-32-270 page 32)

FEATURES

Universal tip and curvilinear blade shaft, made of corrosion protected metal.
Dimensions: 150 x 35 x 15mm / 5.9 x 1.4 x 0.6 in.
Approximate weight: 0.20 kg / 0,44 lbs

Catalog No.	LW11-39

BALL JOINT BLADE

FUNCTION AND USE

The ball joint blade is used to engage or remove a ball joint from a ball socket.

FEATURES

Metal tip and blade protected against corrosion.
Dimensions: 170 x 65 x 35mm / 6.7 x 2.6 x 1.4 in.
Approximate weight: 0.15 kg / 0,33 lbs

Catalog No.	LW11-40

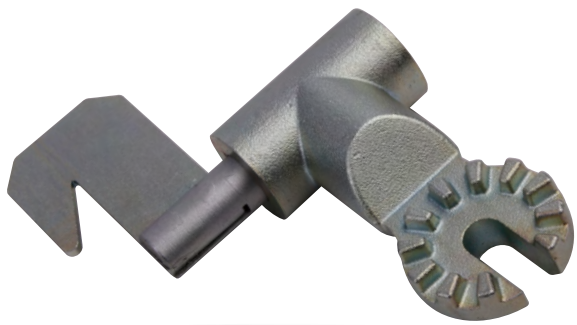

ROTARY BLADE

FUNCTION AND USE

The rotating blade is used for :
Unwinding a binding wire, deforming and possibly breaking a binding wire in the groove of a rigid insulator.

FEATURES

Universal tip and rotating blade, made of metal protected against corrosion.
Dimensions: 115 x 65 x 20 mm / 4.5 x 2.6 x 0.8 in.
Approximate weight: 0.15 kg / 0,33 lbs

Catalog No.	LW11-41

HAMMER

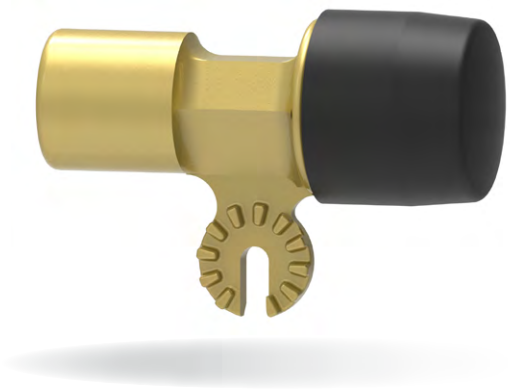

FUNCTION AND USE

The hammer is used to carry out small-amplitude movements by percussion on small parts, for example:

- moving an alignment clamp along a conductor supported by Insulated sticks or booms;
- knocking on the head of a pin to insert it into its housing;
- Used for many operations around energized conductors such as moving, suspension clamps and other pieces of hardware requiring a forceful blow.

FEATURES

Universal bit and body in corrosion protected metal.
Double head hammer, one bare head, the other rubber coated.

Catalog No.	Dimensions (mm)	Dimensions (in)	Approx. weight (kg)	Approx. weight (lbs)
LW11-42	140 x 100 x 60	5.5 x 3.9 x 2.3	1,1	2,4

WITH INSULATING ROD WEIGHT

FUNCTION AND USE

The insulating rod with a weight is used to detect, by percussion, the presence of anomalies on insulating columns and ceramic insulator chains.
The sound emitted at the moment of impact allows the detection of defects, such as cracks.

Catalog No.	**LW11-43**

FEATURES

Universal tip made of synthetic material.
Spherical weight made of corrosion protected metal.
Flexible insulating rod made of synthetic fibres.
Length: 200 mm / 7,87”
Feeder diameter: 20 mm / .8”
Approximate weight: 0.1 kg / 0,22 lbs

MIRROR

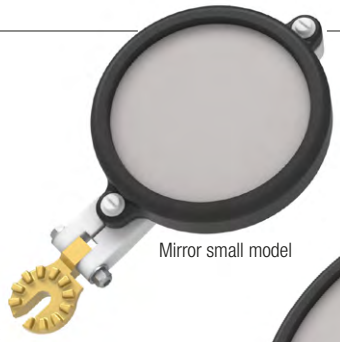

Mirror small model

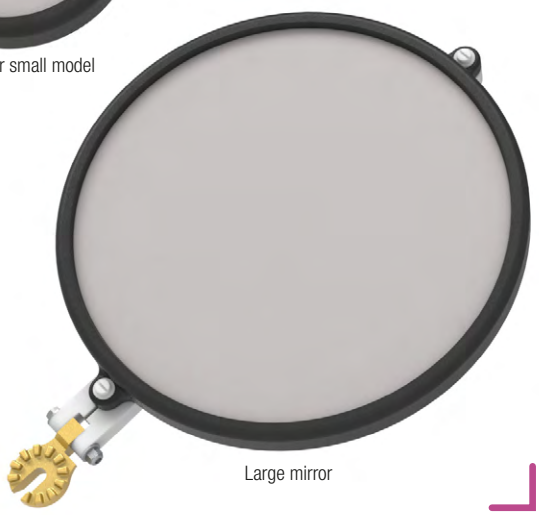

Large mirror

FUNCTION AND USE

Angle adjustment enables the operator to inspect insulators, and other equipment which is difficult to see without coming in contact with energized conductors.

FEATURES

Universal metal tip.
Swivel frame made of synthetic material;
Magnifying mirror protected from shocks by a rubber cover.
Manoeuvring tool for quick release

Catalog No.	Designation	Dimensions (mm)	Dimensions (in)	Approx. weight (kg)	Approx. weight (lbs)
LW11-44	Mirror small model	210 x 120 x 36	8.2 x 4.7 x 1.4	0,30	0,7
LW11-45	Large mirror	370 x 260 x 50	14.5 x 10.2 x 1.9	1,6	3,5

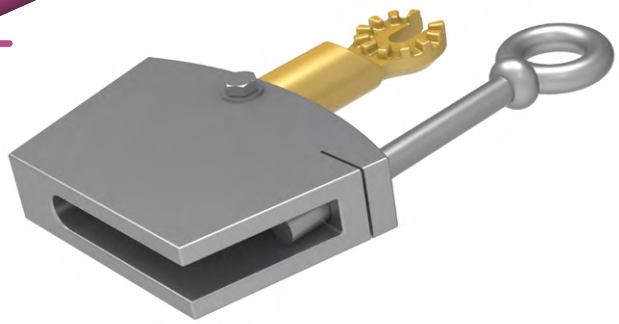

HANDLE GRIPPER

FUNCTION AND USE

Attached to a universal handle, the handle gripper allows an operator at one phase potential to set and tighten without the risk of getting into the by-passed circuit.
It also allows for remote grounding.

FEATURES

Body with recess for handle (max. capacity 65 mm / 2,56”), universal end cap, locking pin, made of corrosion protected metal.
Dimensions: 170 x 120 x 25 mm / 6.7 x 4.7 x 1 in.
Approximate weight: 0.5 kg / 1,1lbs

Catalog No.	LW11-46

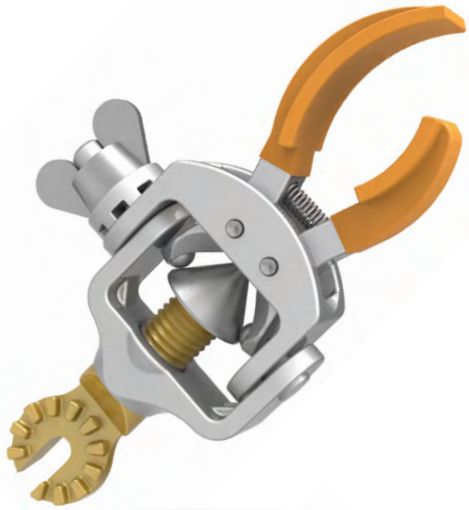

INSULATOR/TUBE GRIP

FUNCTION AND USE

Grips the cap of a chain insulator to aid in controlling, aligning, etc.
Jaws are adjustable for various angles.
It can also be used to grab and remove insulating poles that have been left on a line due to abandonment because of adverse weather conditions.

FEATURES

End cap, jaw spreading and orientation mechanism and jaws, made of corrosion protected metal.The jaws are covered with a synthetic material.
Dimensions: 210 x 105 x 80 mm / 8.3 x 4.1 x 3.1 in
Clamping capacity: 26 to 64 mm / 1” to 2,52”
Approximate weight: 1.10 kg / 2,43 lbs

Catalog No.	LW11-47

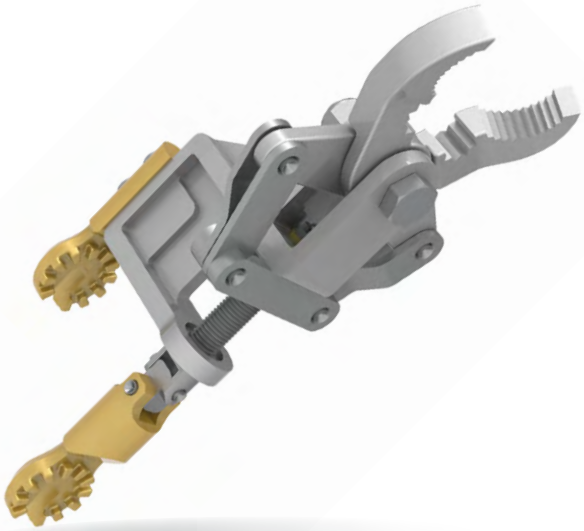

GIMBAL PLIERS

FUNCTION AND USE

The gimbal pliers is used for gripping, securing, positioning and removing small parts.
It is used, for mounting or dismounting an alignment clamp on the distribution network.

FEATURES

Rigid universal joint, universal joint with cardan joint, articulated jaws and control screw, made of corrosion protected metal.
Dimensions: 250 x 90 x 80 mm / 9.8 x 3.5 x 3.1 in.
Approximate weight: 1 kg / 2,2 lbs

Catalog No.	LW11-48

ADJUSTABLE INSULATOR FORK

FUNCTION AND USE

The ajustable insulator fork is used to insert, remove or secure one or more suspension chain elements.
The jaws are opened and closed by rotating the universal tip pole on its axis.

FEATURES

Universal end cap and jaw opening and closing mechanism made of corrosion protected metal. Swivel jaws made of synthetic material.

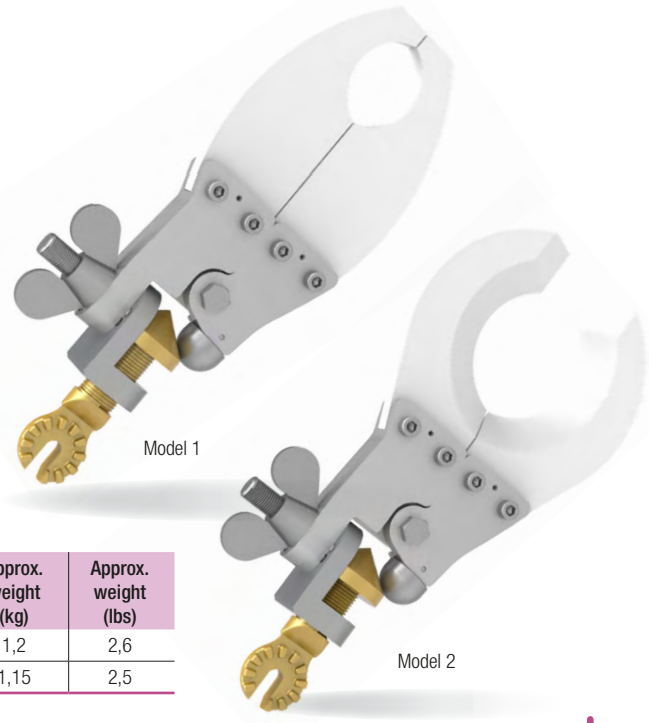

Catalog No.	Designation	Capacity of clamping (mm)	Capacity of clamping (in)	Dimensions (mm)	Dimensions (in)	Approx. weight (kg)	Approx. weight (lbs)
LW11-49-1	Model 1	39 - 60	1,54" - 2,36"	290 x 135 x 30	11.4 x 5.3x 1.2	1,2	2,6
LW11-49-2	Model 2	64 - 115	2,52" - 4,53"	290 x 135 x 30	11.4 x 5.3x 1.2	1,15	2,5

HOLDING CLAMP

FUNCTION AND USE

The holding clamp is used to prevent the unwinding of a conductor when it has been damaged. It also facilitates the installation of an anchoring, reparing or connecting sleeve, particularly whilst using the sticking method.

FEATURES

Body, jaws and ring bolts made of corrosion protected metal.

Catalog No.	Capacity of clamping section (mm²)	Capacity of clamping section	Torque of tightening (daN)	Torque of tightening (lbs)	Dimensions (mm)	Dimensions (in)	Approx. weight (kg)	Approx. weight (lbs)
LW11-50-34	34	#2	1,5	1,5	210 x 105 x 80	8.2 x 4.1 x 3.1	0,4	0,88
LW11-50-54	54	1/0						
LW11-50-75	75	3/0						
LW11-50-117	117	230 kcmils						
LW11-50-148	148	300 kcmils						
LW11-50-228	228	450 kcmils						

VISE GRIPS

FUNCTION AND USE

The vise grip is used to grip or move various pieces.
The jaws are locked or unlocked by moving the movable arm.

FEATURES

Grips made of corrosion protected steel.
Dimensions: 310 x 90 x 20 mm / 12.2 x 3.5 x 0.8 in.
Clamping capacity: 5-25 mm / 0,2" – 0,98"
Approximate weight: 0.7 kg / 1,54 lbs

Catalog No.	**LW11-51**

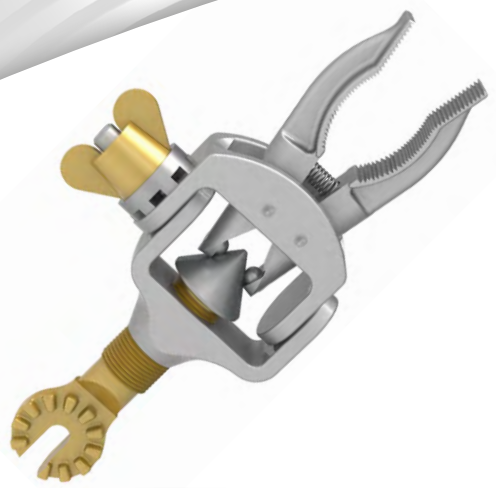

ALL-ANGLE PLIERS

FUNCTION AND USE

The all-angle pliers designed to grasp from any angle and tighten by clockwise rotation of the universal tool handle. The jaws are held firmly in position with a wing-nut.
Used as a holding device for retaining bolt heads and loose hardware, adjusting arcing horns, replacing cotter keys, etc.

FEATURES

Universal tip and jaws, made of corrosion-protected metal.
Jaw opening and closing mechanism, made of corrosion protected metal. Jaw swing mechanism, three positions, lockable with wing nut, made of bronze and steel protected against corrosion.
Dimensions: 200 x 105 x 30 mm / 7.9 x 4.1 x 1.2 in.
Clamping capacity: 0 - 35 mm / 0” – 1,38” - Approximate weight: 0.8 kg / 1,76 lbs.

Catalog No.	LW11-52

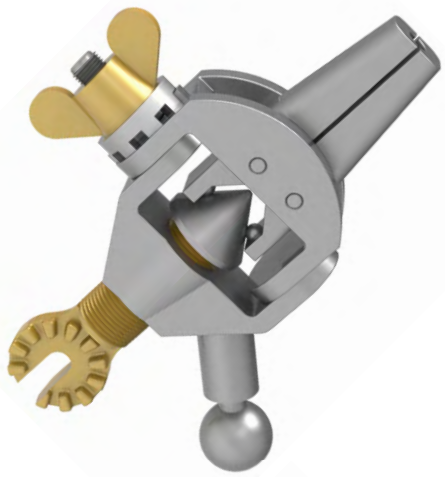

BEAK NOSE PLIERS

FUNCTION AND USE

The beak nose pliers are used to clamp loose hardware and other equipment.
To be used with U-shaped ball end: Catalog No. **LW11-55-24** see page 117

FEATURES

The tool consists of :

- A two-part body that can be articulated at 90°. The operator can maintain the desired angle with a nut.
- A system consisting of a universal brass end cap, this part is the operating pin that opens or closes the clamp by screwing.
- The clamp is made up of 2 steel ends protected against corrosion.
- A ball is attached to the body to move the tool without activating the mechanism through the shaft.

All parts are made of stainless steel, except for the universal screw and the nut which are made of bronze.
Approximate weight: 1.2 kg / 2,65 lbs.

Catalog No.	LW11-53

CUTTING PLIERS

FUNCTION AND USE

The pliers are used to straighten out the split end pins on chain insulators.
To be used with U-ball end fitting : Catalog No. **LW11-55-24** see page 117

FEATURES

The tool consists of :

- A two-part body that can be articulated at 90°. The operator can maintain the desired angle with a nut.
- A system consisting of a universal end cap, this part is the operating pin that opens or closes the pliers by screwing. The pliers are made up of 2 ends like a pair of pliers.
- The clamp cannot close by itself.
- A ball is attached to the body to move the tool without activating the mechanism through the shaft.

All parts are made of stainless steel except the universal screw and the nut which are made of bronze.
Approximate weight: 1.4 kg / 3,1 lbs.

Catalog No.	LW11-54

U-BALL FITTING

FUNCTION AND USE

The U ball end is used, together with a universal pole, to handle tools equipped with a ball attachment. It can also be used to position line equipment with appropriate clamps to grip the stirrup.

FEATURES

It is composed of :

- A stainless-steel body designed to hold the sphere.
- A brass screwing pin to adjust the clamping on the ball. At one end of the shaft there is a universal adapter to fit the tool to the universal pole and at the other end there is the stainless-steel movable jaw which is held in the body. This part presses on the ball to tighten it.

Catalog No.	Capacity of clamping (mm)	Capacity of clamping (in)	Dimensions (mm)	Dimensions (in)	Approx. weight (kg)	Approx. weight (lbs)
LW11-55-24	24	.94"	105 x 35 x 5	4.1 x 1.3 x 0.2	0,3	0,7
LW11-55-30	30	1.18"	125 x 45 x 9	4.9 x 1.7 x 0.35	0,5	1,1

MAGNETIC U-TIP

FUNCTION AND USE

The magnetic U-tip is used to remove small metal parts, preventing them from falling.

FEATURES

Universal brass end cap, other metal parts must be protected against corrosion.
Dimensions (L x W): 48 x 30 mm / 1.89 x 1.18 in.
Approximate weight: 0.25 kg / 0,55 lbs.

Catalog No.	**LW11-56**

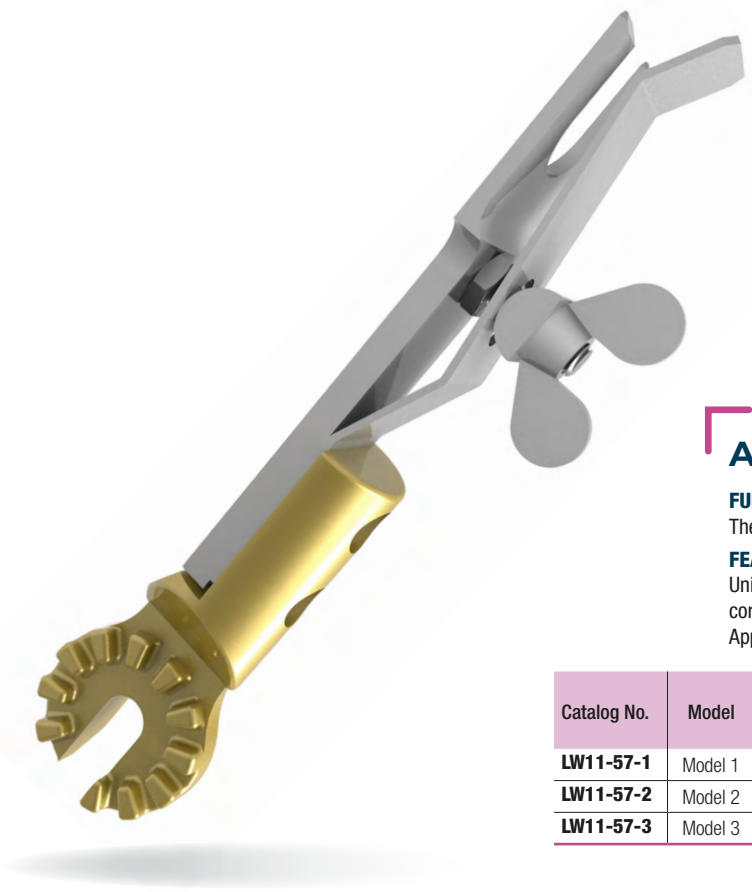

AXLE HOLDER

FUNCTION AND USE

The axle holder is used for the installation and removal of axles and bolts.

FEATURES

Universal attachment, fork blade, spring blade with adjusting screw, made of corrosion protected metal
Approximate weight: 0,2kg / 0,44 lbs

Catalog No.	Model	Grip capacity : diameter axis (mm)	Grip capacity : diameter axis (in)	Dimensions (mm)	Dimensions (in)
LW11-57-1	Model 1	11 to 13 mm	.43" to .51"	160 x 50 x 30	6.3 in x 2 x 1.2
LW11-57-2	Model 2	14 to 17 mm	.55" to .67"		
LW11-57-3	Model 3	16 to 19 mm	.63" to .75"	160 x 50 x 35	6.3 in x 2 x 1.37

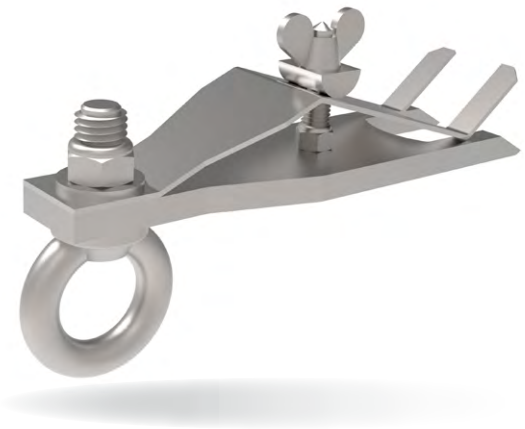

LOCKNUT HOLDING TOOL

FUNCTION AND USE

The locknut holding tool is used, for example, when installing bird protection, to hold the locknut in place while it is tightened.
This tightening should be completed with a spanner.

FEATURES

Grip ring, fork blade, spring blade with adjusting screw, made of corrosion-protected metal.
Dimensions: 140 x 75 x 35 mm / 5.51 x 2.95 x 1.38 in.
Approximate weight: 0.20 kg / 0,44lbs

Catalog No.	**LW11-58-1** (Model 1)

Catalog No.	**LW11-58-2** (Model 2)

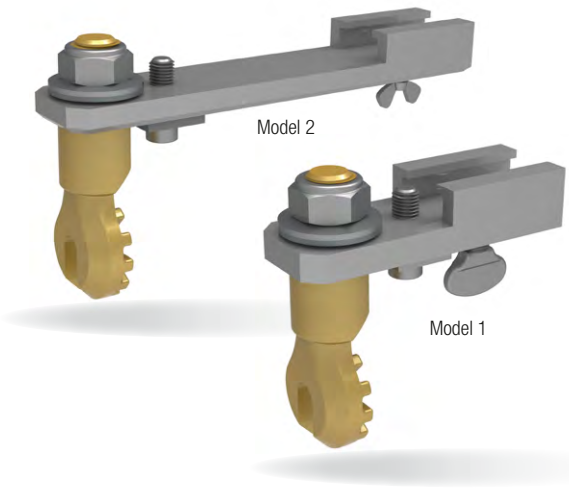

SPANNER HOLDER

FUNCTION AND USE

The spanner holder allows the use of single-headed spanners or a ratchet spanner for holding, screwing and unscrewing nuts and bolts.

FEATURES

Universal end cap and sliding arm, made of corrosion protected metal.
Slide capacity: 20 mm (0,79”) wide and 7 mm (0,28”) thick spanner bodies.

Catalog No.	Dimensions (mm)	Dimensions (in)	Approx. weight (kg)	Approx. weight (lbs)
LW11-59-1	85 x 30 x 80	3.3 x 1.2 x 3.14	0,30	0,7
LW11-59-2	155 x 30 x 80	6.1 x 1.2 x 3.15	0,45	1,0

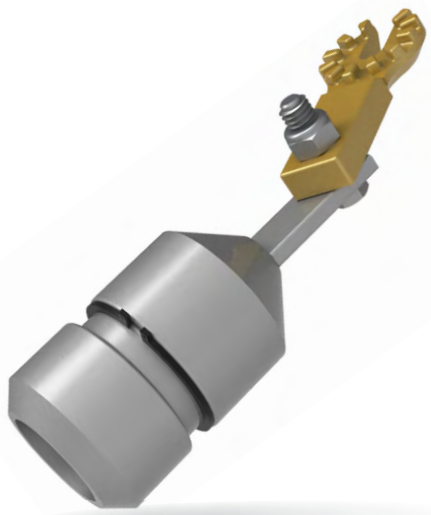

DEAD-END CLAMP HOLDER

FUNCTION AND USE

Used with a universal pole, the adaptable clamp holder allows the installation of a dead-end clamp with pin connection

FEATURES

Metal tool consisting of a tube equipped with a spring-loaded blade, combined with a universal nozzle that can be adjusted by means of a screw to set the pressure.
Dimensions: 170 x 45 x 55 mm / 6.69 x 1.77 x 2.17 in.
Approximate weight: 0.40 kg / 0,88 lbs

Catalog No.	**LW11-60**

FLEXIBLE WRENCH HEAD

FUNCTION AND USE

The flexible wrench head is used to screw, unscrew or secure nuts or bolts.

FEATURES

Universal socket, gimbal, spring and socket holder for standard 12.7 mm (1/2 inch) sockets, made of corrosion protected metal.
Dimensions: 140 x 38 x 38 mm / 5.51 x 1.50 x 1.50 in.
Approximate weight: 0.40 kg / 0,88 lbs.

Catalog No.	LW11-61

WASHER HOLDER

FUNCTION AND USE

The washer holder is used to place washers or similar mechanical components.

FEATURES

Universal end cap and body in brass, and leaf spring with adjusting screw in corrosion protected steel.
Dimensions: 140 X 35 X 35 mm / 5.51 x 1.38 x 1.38 in.
Gripping capacity: Ø 16 to 18 mm / 0,63” to 0,71”
Approximate weight: 0.2 kg / 0,44 lbs.

Catalog No.	LW11-63

WEDGE HOLDER

FUNCTION AND USE

The wedge holding clamp is used to put in position the wedge used in suspension clamps.

FEATURES

Universal end cap, body and holding blades, made of corrosion-protected metal.
Gripping capacity of the holding blades: clamping wedges from 4 mm (0,16”) to 12 mm (0,47”).

Catalog No.	Designation	Dimensions (mm)	Dimensions (in)	Approx. weight (kg)	Approx. weight (lbs)
LW11-64	Model 1	160 x 70 x 60	6.3 x 2.75 x 2.3	0,2	0,4

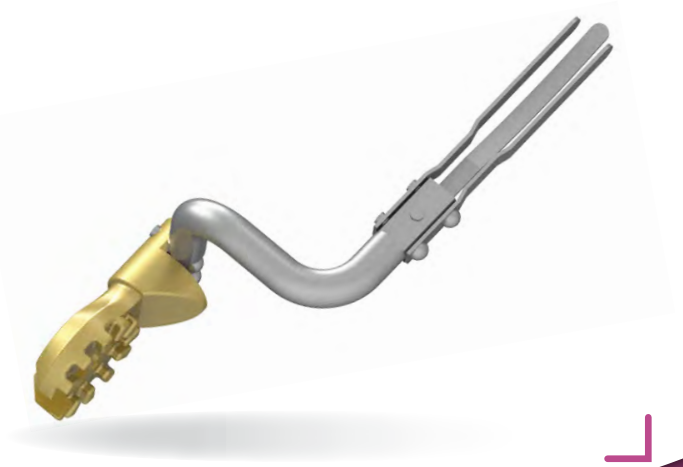

ANTI-PARASITE BRAID HOLDER

FUNCTION AND USE

The interference suppression braid holder is used to place an interference suppression braid to by-pass joints between the voltage side insulator ball rod and suspension clamps or dead-end clamps.

- Model 1 for suspension clamp.
- Model 2 for dead-end clamp.

FEATURES

End cap, rods and slides made of corrosion protected metal.
Slide dimensions: length 33 mm / 1,30”
Inner cross section: 8.5 mm x 3.5 mm / 0.33 x 0.14 in.
Depending on the model, the slides are aligned in the same plane or in a perpendicular plane. Dimensions: 195 x 100 x 25 mm / 7.68 x 3.94 x 0.98 in.
Approximate weight: 0.20 kg / 0,44 lbs

Catalog No.	**LW11-65-1** (Model 1)

Catalog No.	**LW11-65-2** (Model 2)

PIGTAIL

FUNCTION AND USE

The pigtail is used to handle parts with a ring, such as cable ties, spreader extensions, etc...

FEATURES

Universal metal tip protected against corrosion.
Corrosion protected steel rod, 10 mm diameter, pigtail shape.
Dimensions: 120 x 60 x 50 mm / 4.72 x 2.36 x 1.97 in.
Approximate weight: 0.20 kg / 0,44 lbs.

Catalog No.	**LW11-66**

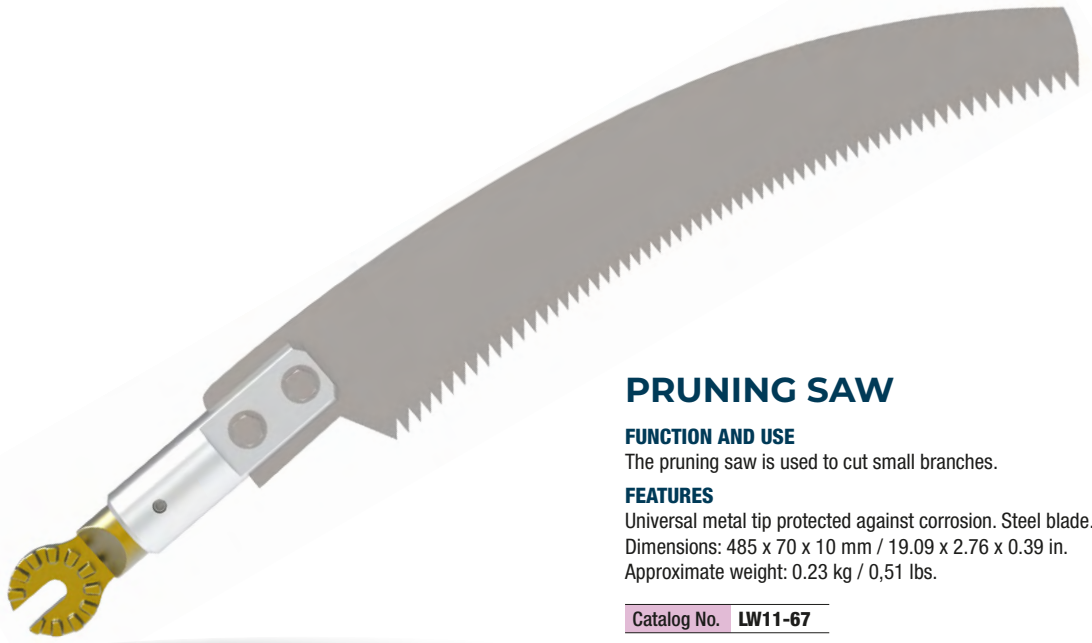

PRUNING SAW

FUNCTION AND USE

The pruning saw is used to cut small branches.

FEATURES

Universal metal tip protected against corrosion. Steel blade.
Dimensions: 485 x 70 x 10 mm / 19.09 x 2.76 x 0.39 in.
Approximate weight: 0.23 kg / 0,51 lbs.

Catalog No.	**LW11-67**

HACK SAW

FUNCTION AND USE

The hacksaw is used to saw metal parts.

FEATURES

Universal tip mount, removable handle with universal tip, made of corrosion protected metal.
Steel blade, length 300 mm / 11,8".
Dimensions of the frame: 390 x 120 x 20 mm / 15.35 x 4.72 x 0.79 in.
Handle dimensions: 150 x 50 x 45 mm / 5.91 x 1.97 x 1.77 in.
Approximate weight: 0.50 kg / 1,1 lbs.

Catalog No.	Designation
LW11-68	Hacksaw with handle
LW11-68-PA	Removable handle only

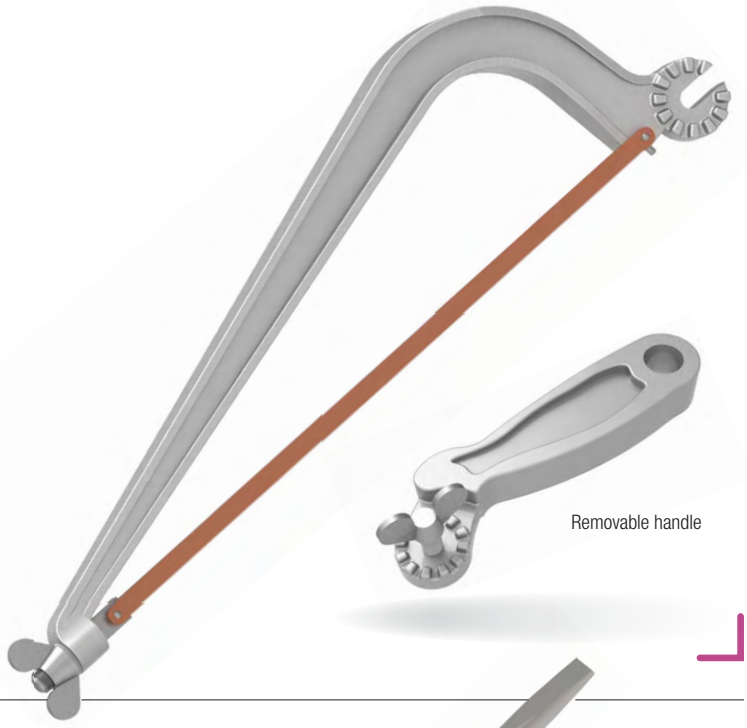

SCREWDRIVER

FUNCTION AND USE

The screwdriver is used for :
- Screwing and unscrewing slotted head screws,
- Also Ideal for several odd jobs where a small handle is needed.

FEATURES

Universal tip, shaft and blade, made of corrosion-protected metal.
Dimensions: 180 x 33 x 10 mm / 7.09 x 1.30 x 0.39 in.
Approximate weight: 0.20 kg / 0,44 lbs.

Catalog No.	LW11-69

LOWER SUSPENSION YOKE HOLDER

FUNCTION AND USE

Attached to an end-fitting on either end of a universal hand pole, the lower suspension yoke holder is used to hold the lower yoke of a double suspension chain in position after machanical tension has been taken up.
The lower prongs of the tools engage on the conductor while the upper prongs exert their force against the line yoke.
The distance between the upper and lower prongs is varied by rotating the universal stick.

FEATURES

Universal end cap, articulated arm and mechanism, made of corrosion protected metal.
Dimensions: 430 x 340 x 180 mm / 16.93 x 13.39 x 7.09 in.
Distance between upper and lower horns :
- Minimum: 92 mm / 3,62"
- Maximum dimensions: 310 mm / 1'

Approximate weight: 1.5 kg / 3,31 lbs.

Catalog No.	LW11-70

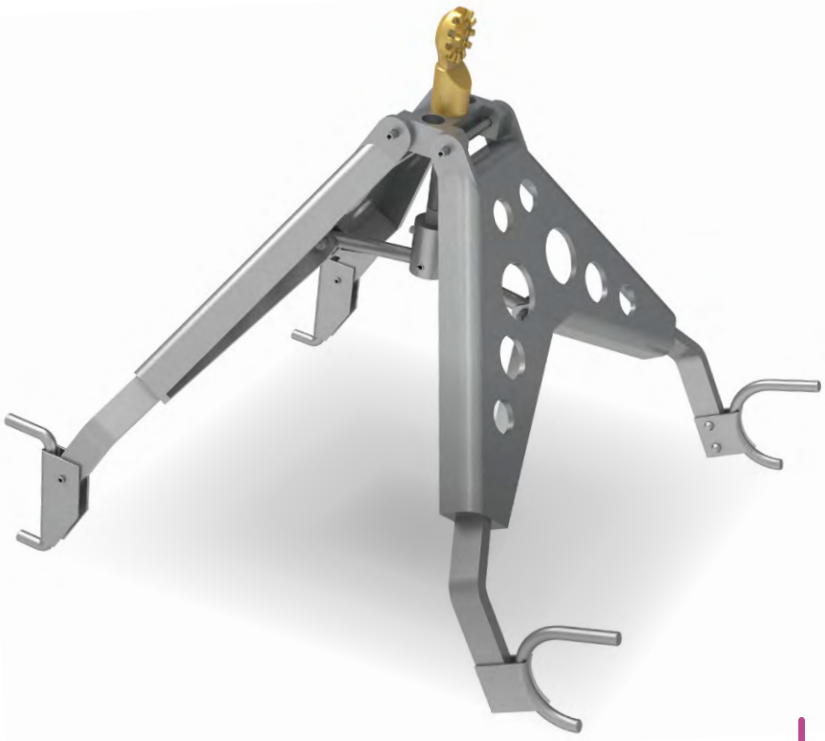

UNIVERSAL TOOLS

IEC 60832-2

TORQUE WRENCH

FUNCTION AND USE

The torque wrench is used to tighten the screws or nuts on the terminal blocks to their required torque.
An acoustic signal indicates that the desired torque has been reached.

FEATURES

Orange-coloured insulating rod. Universal bit and socket holder for sockets of the 12.7 mm (1/2 inch) series, made of corrosion-resistant metal.
Synthetic body, with torque display, and carrying a 9 V battery powered sound device inside.
Dimensions: 700 x 150 x 60 mm / 27.6 x 5.9 x 2.4 in.
Approximate weight: 0.8 kg / 1,76 lbs.

Catalog No.	LW11-71

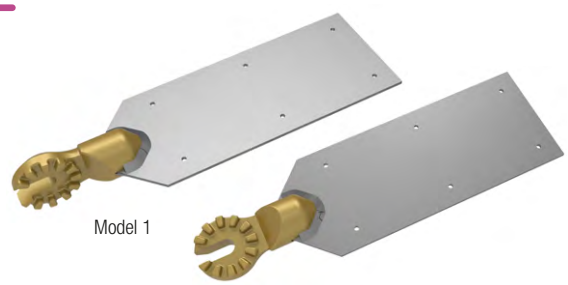

Model 1

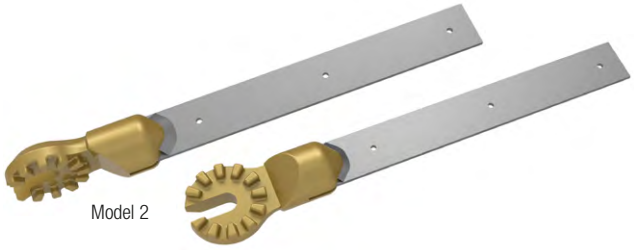

Model 2

ABRASIVE BOARD

FUNCTION AND USE

The abrasive board allows the use of paste, powder or liquid, via an impregnated cloth or rag fixed on the abrasive board by screws, rivets or gluing.
It is used to clean the contacts of substation equipment, such as disconnectors.

FEATURES

Universal end fitting in bronze.
Board, made of corrosion protected steel, with M3 threaded holes.

Catalog No.	Designation	Length total (mm)	Length total (in)	Width of the blade (mm)	Width of the blade (in)	Approx. weight (kg)	Approx. weight (lbs)
LW11-72-1D	Model 1 flat	200	7,8	60	2,36	0,23	0,5
LW11-72-1C	Model 1 side						
LW11-72-2D	Model 2 flat			20	0,8	0,15	0,3
LW11-72-2C	Model 2 side						

SAND PAPER HOLDER

FUNCTION AND USE

The sand paper holder is used to clean the contacts of substation equipment, such as disconnectors. The sand paper holder can be use straight or bent by applying tension.

FEATURES

Universal end fitting in bronze.
Blade and tensioner in corrosion-resistant steel.

Catalog No.	Designation	Length total (mm)	Length total (in)	Width of the blade (mm)	Width of the blade (in)	Approx. weight (kg)	Approx. weight (lbs)
LW11-73-D	Flat abrasive	300	11,8	40	1,57	0,37	0,8
LW11-73-C	Side abrasive						

MEASURING AND TESTING EQUIPMENT

TAG5000 - 50HZ OR 60HZ WIRELESS PHASE COMPARATOR FOR OVERHEAD LINES

Phase comparator for overhead lines from 4 kv to 500 kv (TAG 5000S version for use in substations from 4 kv to 36 kv).

Wireless phase comparator for three phase network with nominal voltages from 4 kV up to 230 kV - 50 Hz or 60 Hz (to be specified).

Shall be used with two insulating sticks (not included) complying with the nominal voltage and having universal adaptors.

FUNCTION AND USE

Alternative solution to the resistive voltmeter for checking the phase agreement of a network before looping back. Phase agreement is indicated by a signal sound and light. TAG5000S version with safety electrode extensions for use on medium-voltage substation networks (cable heads, transformer terminals and circuit-breaker cells).

FEATURES

Controls all types of three-phase networks from 4 to 500 kV. (230 kV to 500 kV with specific antenna extensions).
433.9 MHz coded HF link compliant with Telecom standards.
Supplied with two pairs of contact electrodes: two « V » probe (40 mm / 1,5") and two hooks (60 mm / 2,36").
It adapts to all types of insulating poles by means of universal connectors.
The transmitter (grey device) signals the presence of voltage with a sound and light signal, then transmits the phase information to the receiver. The receiver (blue device) measures the phase angle.
It indicates agreement by sound and light signals.
Self-monitoring and simulation of all functions.
Can be used in any weather.
Powered by 9-volt batteries. Battery life: 6 months.
Station version: this comparator exists in version with antennas for substassions applications; 10-30 kV. Ref. TAG5000-S.

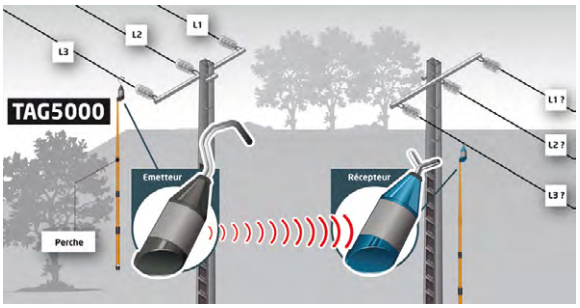

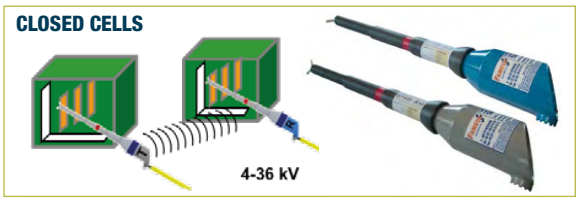

Catalog No.	Voltage range	Frequency	Use	Electrode	Packaging
T5KFR004230C5	4 - 230 kV	50 Hz	Outside	AC60 / AC120 / D100	Metal box
T5KFR004230C6	4 - 230 kV	60 Hz	Outside	AC60 / AC120 / D100	Metal box
T5KFR004500H5	4 - 500 kV	50 Hz	Outside	AC60 / AC120 / D100	Bag
T5KFR004500H6	4 - 500 kV	60 Hz	Outside	AC60 / AC120 / D100	Bag

Catalog No.	Designation
T5KSFR0436M5KIT	High-voltage phase comparator kit from 4kV to 36kV 50Hz for use in substations and transformer outlets. The kit includes two transmission and measurement modules with their electrode extensions, contact electrodes and two telescopic poles, all in a rigid plastic case.
T5KSFR0436M6KIT	High-voltage phase comparator from 4kV to 36kV 60Hz for use in substations and transformer outlets. The kit includes the two ransmission and measurement modules with their electrode extensions, contact electrodes and two telescopic poles, all in a rigid plastic case.
T5KSFR04230H5	High-voltage phase comparator kit from 4kV to 230kV 50Hz for use in substations and transformer outputs from 4kV to 36kV. The kit includes the two transmission and measurement modules with their electrode extensions and contact electrodes, all in a very robust case.
T5KSFR04230H6	High-voltage phase comparator kit from 4kV to 230kV 60Hz for use in substations and transformer outputs from 4kV to 36kV. The kit includes the two transmission and measurement modules with their electrode extensions and contact electrodes, all in a very robust case.
Catalog No.	Accessory
VT5K	Carrying case for TAG5000 with 500 kV antennas and accessories

NEW PRODUCT

MPHASE - WIRELESS BIPOLAR PHASE COMPARATOR

CEI 61481-1-CE

- **Light, compact and safe, including in substations and on transformer terminals**
- **Positive indication of stability-independent phase matching of frequency**
- **No risks due to the presence of a connecting cable**
- **Comfortable range of use (over 25m / 82ft).**
- **Possibility of checking the match through walls (inside / outside), separate sealed**
- **Detection module sealed. Direct access to battery separate compartment, also sealed.**
- **100 dB audible signal (at 1m / 3ft).**
- **Visual indication with lateral reminder.**

FUNCTION AND USE

Phase comparator for three-phase networks with a rated voltage of 1 kV to 69 kV 50Hz and 60Hz.

Must be used with 2 insulating poles (not supplied) suitable for the rated voltage Indoor / Outdoor use in all weathers.

FEATURES

Device complies with IEC standard
- Indoor and outdoor use
- Transmitter (T): grey case 280 mm / 11,26”
  Ø59 mm / 2,3”
  0,39 kg / 0,86 lbs.

Indicates the presence of voltage with a visual and acoustic signal, then transmits phase information to the receiver.
- Receiver (R): blue case 286 mm / 11,26”
  Ø59 mm / 2,3”
  0,39 kg / 0,86 lbs.

Indicates the presence of voltage and gives a visual and acoustic signal if the phase is correct.
- Built-in self-test simulating all functions: measurement circuits, indications, radio link and battery status.
- HF radio transmission
- Minimum range of 25 m (82ft) in open field
- Powered by 2 x 9 V alkaline batteries.
- Metallic carrying case with set of contact electrodes (straight and V-shaped)
- Silicon cloth

Catalog No.	MPHASE

INNOVATION

MTAG-LW - HTA VOLTAGE DISAPPEARANCE INDICATOR

IEC 61243-1 : NF EN 61243-1 CE

FUNCTION AND USE

Designed to verify that a rated voltage is actually present in the line between 1 kV and 69 kV.

- The device must detect any loss of nominal voltage on a network or in a substation.

With BT318 clamp

With DUCKBILL pliers

INNOVATION

OPTIMUM SOUND INDICATION
The 100 dB sound signal (at 1m / 3ft) remains audible even in the presence of road traffic or strong winds, thanks to natural conduction by an acoustic «horn».

OPTIMUM LIGHTING INDICATIONS
The luminous indicator can be seen in all the usual working environments, in sunshine and fog, with a wide angle of visibility and to the sides thanks to its luminous ring.

DIRECT ACCESS TO THE BATTERY AND A HERMETICALLY SEALED ELECTRONIC
compartment When replacing the battery, this configuration avoids:
- Inadvertently swapping enclosures and electronics;
- Damage electronic circuits;
- Allow moisture to enter the device when changing the battery atthesametime.

DEVICE CLAMPING
Fix the device to the conductor (from 3mm /0.12" to 32 mm / 1.26") using its DUCKBILL clamp: pre-position with a spring, then tighten by screwing.

FUNCTIONAL RELIABILITY
- Low battery check (orange light)
- Latest-generation electronics
- Calibration of the detection thresholds on real voltage (HT)

FEATURES
Voltage ranges from 1 kV to 69 kV - Network frequencies: 50 and 60 Hz

- Group 2 = Indication with at least one active signal, indicating - absence of voltage «It is switched off when the contact electrode is brought into contact with a live part.
- Indication of the presence of a rated voltage within the calibrated range causes the **GREEN** LED to light up.
- Indication of loss of rated voltage by indicator lights **RED** flashing and an intermittent beep.
- The self-test checks all the circuits, the reference detection level and the battery voltage.
- Low battery level indicated by the dedicated **ORANGE** LED.
- Designed for outdoor use.
- Operating temperatures : -25 °C to +55 °C / -13 °F to 131 °F.
- Humidity: 96% max.
- Power supply: 9 V alkaline battery - IEC 6LR61
- Accepts batteries with identical voltage output
- Grey polycarbonate case
- Dimensions: Ø 59 mm / 2 1/3" ; L = 280 mm / 11" without electrode.
- Net weight: 0.390 kg (0,86 lbs) with pole adaptor (without clamp).
- User manual in a choice of language packs.
- Packaging: in a bag with clip (depending on version).

ACCESSORIES
INTERCHANGEABLE POLE ADAPTERS

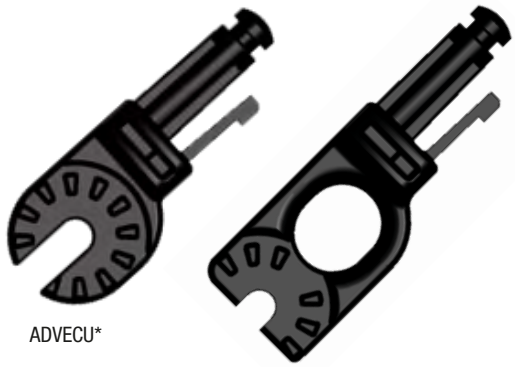

ADVECU*

ADVECUCR*

* Other pole adapters available on request

Catalog No.	Voltage range	Frequency	Device color	Insulated stick fitting	Probe **	User Manual *	Packaging
MTAGLW1036FHUC-DBC332	10 - 36 kV	50 / 60 Hz	Grey	Universal or Clampstick	Duckbill Clamp	Pack F	Soft case
MTAGLW1560FHUC-DBC332	15 - 60 kV						
MTAGLW2069FHUC-DBC332	20 - 69 kV						
MTAGLW2570FHUC-DBC332	25 - 70 kV						

* **Pack F** : Leaflets in FR/GB/DE/ES/PT/PL - **Pack G** : Leaflet in GB/GR/NL/BG/IT/AR/TR
** DUCKBILL clamp : **DBC332** or BT328 clamp : **BT318**

DIRECT ACCESS TO THE BATTERY AND TIGHTLY CLOSED ELECTRONIC COMPARTMENT

INNOVATION

MTAG - HTA VOLTAGE ABSENCE TESTER

IEC 61243-1 : NF EN 61243-1 CE

FUNCTION AND USE

These voltage detectors are designed to check that a nominal voltage is absent from a circuit in a system.
H.T. between 1 kV and 69 kV (Verification of Absence of Voltage):
- The device must detect any rated voltage present on a network or in a substation.
- It avoids the detection of induced voltages so that earthing operations can be carried out.
(voltage ranges calibrated in accordance with IEC recommendations)

OPTIMUM LIGHTING INDICATIONS

OPTIMUM SOUND INDICATION

FUNCTIONAL RELIABILITY

FEATURES

- Metallic cover offering the same level of electromagnetic protection than the metal enclosure

ACCESSORIES

INTERCHANGEABLE POLE ADAPTERS

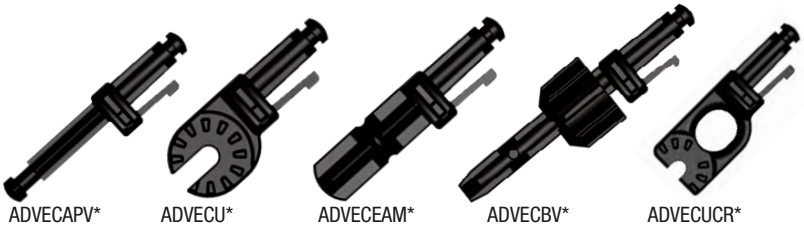

ADVECAPV* ADVECU* ADVECEAM* ADVECBV* ADVECUCR*

* Other pole adapters available on request

Catalog No.	Voltage range	Frequency	Device color	End fitting	Probe	User Manual **	Packaging ***
MTAG0104FHUA	1 - 4 kV	50/60 Hz	Yellow	Universal & APV	V56	Pack F	Metal box
MTAG0310FHUA	3 - 10 kV						
MTAG1036FHUA	10 - 36 kV						
MTAG2069FHUA	20 - 69 kV						
MTAG1036FHUA-FR	10 - 36 kV				Universal		

** **Pack F**: leaflets in FR/GB/DE/ES/PT/PL - **Pack G**: leaflets in GB/GR/NL/BG/IT/AR/TR. *** Boxed version available on request.

INNOVATION

HTAG - VOLTAGE-FREE TESTER HTB

IEC 61243-1 : NF EN 61243-1 CE

FUNCTION AND USE

These voltage detectors are designed to check that a nominal voltage is actually absent from a circuit in a system.

H.T. between 50 kV and 765 kV (Verification of Absence of Voltage):

- The device must detect any rated voltage present on a network or in a substation to enable earthing operations.
- It avoids detecting induced voltages. (voltage ranges calibrated in accordance with IEC recommendations)

DIRECT ACCESS TO THE BATTERY AND A HERMETICALLY SEALED ELECTRONIC COMPARTMENT

OPTIMUM SOUND INDICATION

OPTIMUM LIGHTING INDICATIONS

FUNCTIONAL RELIABILITY

ACCESSORIES

INTERCHANGEABLE POLE ADAPTERS

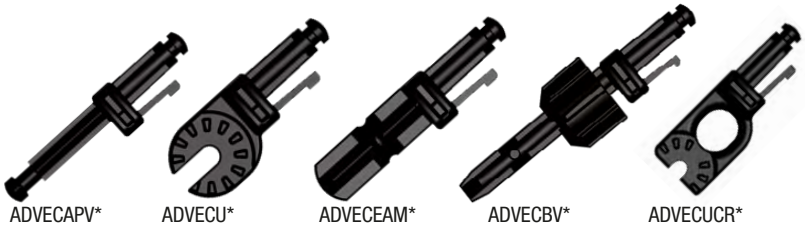

ADVECAPV* ADVECU* ADVECEAM* ADVECBV* ADVECUCR*

* Other pole adapters available on request

Catalog No.	Voltage range	Frequency	Device color	End fitting	Probe	User Manual **	Packaging
HTAG060090FC	60-90 kV	50/60 Hz	Yellow	Universal & EAM	AC60 AC120 D100	Pack F	Metal box
HTAG090225FC	90-225 kV		Red				
HTAG220400FC	220-400 kV		Red				

** **Pack F**: leaflets in FR/GB/DE/ES/PT/PL- **Pack G**: leaflets in GB/GR/NL/BG/IT/AR/TR.

INNOVATION

HTAG-LW - VOLTAGE LOSS INDICATOR HTB

IEC 61243-1 : NF EN 61243-1 CE

FUNCTION AND USE

Designed to check that a rated voltage is actually present in a H.T. system between 50 kV and 765 kV.

- The device must detect any loss of nominal voltage on a network or in a substation.

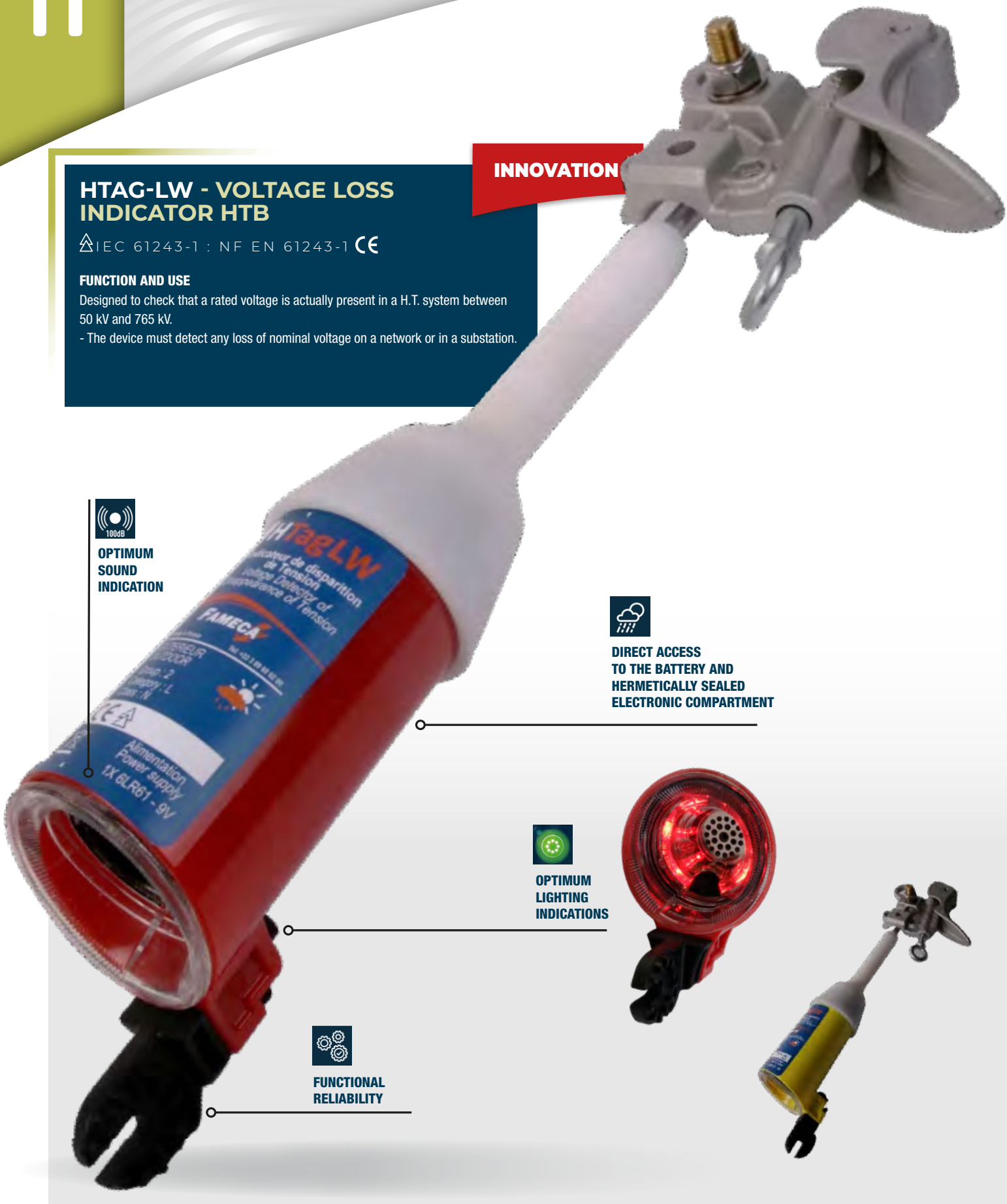

INNOVATION

OPTIMUM SOUND INDICATION

The 100 dB sound signal (at 1 metre) remains audible even in the presence of road traffic or strong winds, thanks to natural conduction by an acoustic horn.

OPTIMUM LIGHTING INDICATIONS

The luminous indicator can be seen in all the usual working environments, in sunshine or fog, with a wide angle of visibility and on the sides thanks to its luminous ring.

DIRECT ACCESS TO THE BATTERY AND TIGHTLY CLOSED ELECTRONIC COMPARTMENT

When replacing the battery, this configuration prevents :

- Inadvertently swapping boxes and electronics;
- Damage electronic circuits;
- Allow moisture to enter the device when changing batteries outdoors.

FUNCTIONAL RELIABILITY

- Low battery indicator (orange light)
- Latest-generation electronics
- Calibration of detection thresholds on real voltage (HV)

FEATURES

Voltage ranges from 50 kV to 7656 kVNetwork frequency: 50 and 60 Hz

- Group: 2 = Indication with at least one active signal, which indicates «absence of voltage» when manually switched on by an «on» switch and is suppressed when the contact electrode is brought into contact with a live part.
- Indication of the presence of a rated voltage within the calibrated range causes the **GREEN** LED to light up.
- Loss of rated voltage indicated by flashing **RED** LEDs and an intermittent audible signal.
- The self-test checks all the circuits, the reference detection level and the battery voltage.
- Low battery level indicated by the dedicated **ORANGE** LED.
- Designed for outdoor use
- Operating temperatures : -25 °C to +55 °C / -13 °F to 131 °F.
- Humidity: 96% max.
- Power supply: 9 V alkaline battery - IEC 6LR61
- Accepts batteries with identical voltage output
- Yellow or red polycarbonate case
- Dimensions: Ø80 mm / Ø3”
- L = 480 mm / 19”.
- Total weight: 1.6 kg / 3,5 lbs
- User manual in a choice of language packs.
- Packaging: Packaged in a bag with a DUCKBILL clip.

ACCESSORIES

INTERCHANGEABLE POLE ADAPTERS

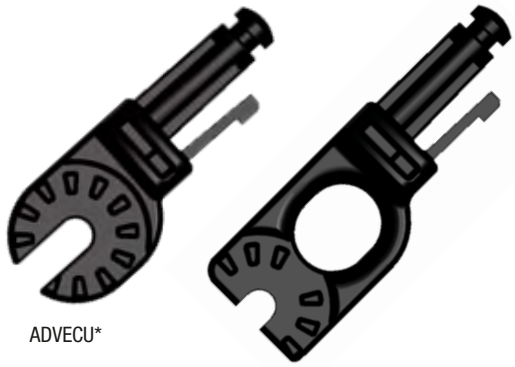

ADVECU*

ADVECUCR*

* Other pole adapters available on request

Catalog No.	Voltage range	Frequency	End fitting	User Manual **	Packaging
HTAGLW060150FH	60 - 150 kV	50/60 Hz	Universal	Pack F	Soft bag
HTAGLW150220FH	150 - 220 kV				
HTAGLW220400FH	220 - 400 kV				

** **Pack F**: Notices in FR/GB/DE/ES/PT/PL - **Pack G**: Notices in GB/GR/BG/IT/NL/AR/TR - **Pack A**: Notices in GB/CN/IN/MY/VN

TTR2 LW
INSULATING POLE TESTER

The TTR2 LW is a portable, self-contained and compact device that can be used to identify electrical insulation or cleanliness faults on equipment before and after each use of your equipment, or as part of a preliminary periodic inspection (minimum requirement).

- Full internal self-test that tests all active parts of the tester.
- External self-test with test tube.
- Illuminated indication by bar graph with change from green to red in the event of a fault.
- Low battery indication.
- Rechargeable battery operated device.
- Compact and robust.
- 100°/" safe device =" no danger to the user
- Allows you to test these percfies in less than 5 minutes in the field

FUNCTION AND USE

The TTR2 LW checks the insulating quality of your poles, jones and insulating ropes.

- The tester does more than simply identify surface defects. Its capacitive measurement principle can find internal and external insulation faults, such as moisture ingress.
- If the green indication appears, the dielectric properties of the pole comply with the expectations of standard IEC 60855-1, i.e. t100kV per 30cm.
- It provides control from the heart, making it a unique device.

Catalog No.	Testing range (mm)	Testing range (in)	User Manual*	Dimensions (mm)	Dimensions (in)	Approx. weight (kg)	Approx. weight (lbs)
TTR2LWF	Insulating rod : Ø10 and Ø15 mm Poles (with foam core) : Ø28 - Ø32 - Ø39 - Ø51 - Ø64 - Ø77 Insulating ropes : from Ø8 mm to Ø19 mm	Insulating rod : Ø0.4 and Ø0.6 in Poles (with foam core) : Ø1.1 - Ø1.25 - Ø1.5 - Ø2 - Ø2.5 - Ø3 in Insulating ropes : from Ø0.31 in to Ø0.75 in	Pack F	410 x 340 x 205 mm	16.1 x 13.4 x 8.1 in	5.85	12,9
TTR2F	Poles (with foam core) : Ø28 - Ø32 - Ø39	Poles (with foam core) : Ø1.1 - Ø1.25 - Ø1.5 in					

*Pack F: FR/GB/DE/ES/PT/PL *Pack G: GB/GR/NL/BG/IT/AR/TR

TC53 - SILICON CLOTH

FUNCTION AND USE

Preserves the surface finish of insulating poles, detectors and other components with dielectric properties.

FEATURES

Dimensions: 380 x 340 mm / 14.96 x 13.39 in.
Weight: 30 g / 0,07 lbs
Supplied in an individual plastic pouch.

Catalog No.	TC53

PHANTOM
SYSTEM PHASE IDENTIFICATION (GPS)

PHANTOM is designed to unequivocally identify electrical phases at all voltage levels (40 V to 1200 kV) of an electrical network. Its advanced technologies enable effortless measurements.
- Works at any voltage.
- Intuituves graphic readings
- Direct, contactless phasing
- Precise GPS satellite technology
- Robust wireless communication
- Robust, field-proven design
- Restraint mode (no GPS position)
- Delayed mode (no cellular coverage)

FUNCTION AND USE

PHANTOM is an exclusive product that displays the phase and phase angle compared with a central reference at any point on the network. It works in both low and high voltage, on overhead networks or substations, and the network remains live in its current configuration. The measurement is accurately calculated thanks to GPS synchronisation between the reference and the measurement unit.

It guarantees operators knowledge of the «true phase» for the following operations:
- Transformer change
- Overhead/underground network connection
- Parallelism of network sectors
- Measurement or remote measurement installation
- Installation of smart meters
- Load mapping for balancing purposes
- Rebuilding the network after weather incidents
- Geo-referenced cartography
- Updating network documentation

FEATURES

Phasing resolution : ± 1 °
- Wireless range: measurement module and wireless display module : 14 m / 45 ft. 11 in.
- PHANTOM reference module:
- Two reference inputs (CAT-III 600V, CAT-IV 300V)
- Ethernet port- Power input- External GPS connection interface
- 50/60Hz

PHANTOM measurement module :
- 4 AA batteries
- Autonomy: 30 hours of continuous operation
- Low-voltage direct phase contact CAT-III 1000V / CAT-IV 600V
- Direct medium-voltage contact up to 72 kV with insulating pole
- Non-contact up to 800 kV
- Capacitive test input
- Measurements of the half-rectified voltage indicator port of the cell array.
- IP-67 classification
- 50/60 Hz

Catalog No.	Designation
PHANTOM-MM	PHANTOM Measurement Module
PHANTOM-MR	PHANTOM Reference Module

MECHANICAL TENSION MEASURING DEVICE

FUNCTION AND USE

The mechanical tension measuring device is used to measure the mechanical tension of a conductor, or to monitor variations in it.
Before measuring, open the vice fully and, if necessary, turn the pointer to zero.

FEATURES

Triangulated deformable system, consisting of two arms and a crosspiece, made of synthetic material. Hooks and vice with ring screw.
Direct reading of mechanical force.
Overall dimensions: 540 x 390 x 120 mm / 21.26 x 15.35 x 4.72 in.
Approximate weight: 2 kg / 4,41 lbs.
Clamping capacity of the vice: 4 to 20 mm (12.6 to 228 mm²) / .16” to .79” (24,8 to 450 Kcmil)
Accuracy: 10%.

Catalog No.	LW12-09

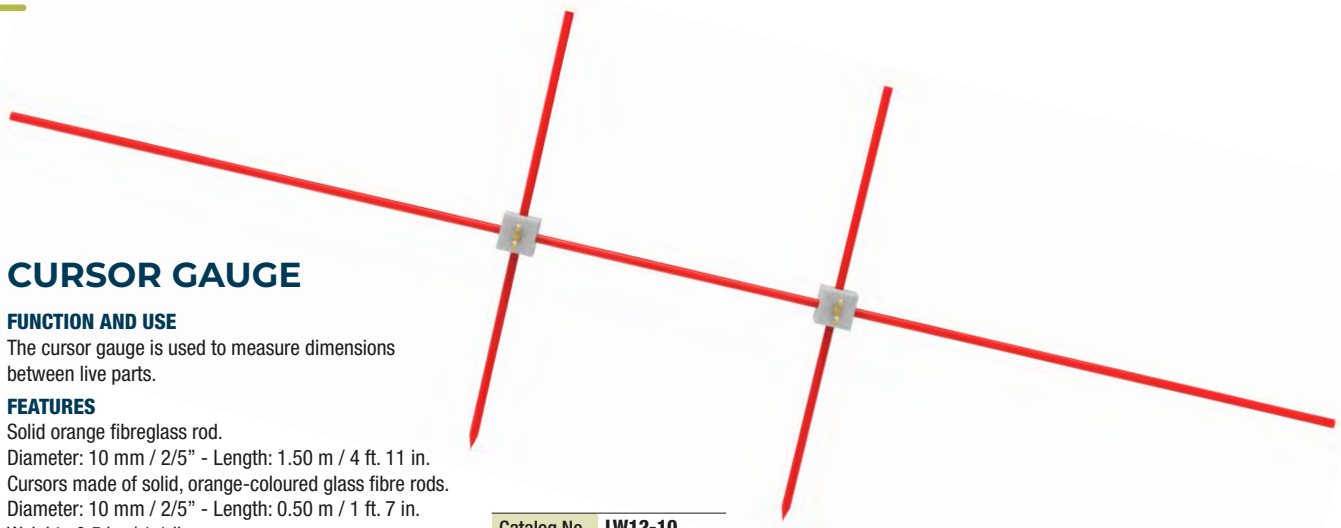

CURSOR GAUGE

FUNCTION AND USE

The cursor gauge is used to measure dimensions between live parts.

FEATURES

Solid orange fibreglass rod.
Diameter: 10 mm / 2/5” - Length: 1.50 m / 4 ft. 11 in.
Cursors made of solid, orange-coloured glass fibre rods.
Diameter: 10 mm / 2/5” - Length: 0.50 m / 1 ft. 7 in.
Weight : 0.5 kg / 1,1 lbs.

Catalog No.	LW12-10

Gauge pole

Extension

INSULATED MEASURING ROD

FUNCTION AND USE

The insulated measuring rod is used to measure distances.
The flexibility of the rod allows curvilinear lengths to be measured.
Can be extended with the LW12-11-RAL.
Can be used with universal stick, clampstick or handheld.

Catalog No.	Designation	Total length, folded (mm)	Total length, folded (in)	Insulated lenght of each elements (mm)	Insulated lenght of each elements (in)	Rod diameter (mm)	Rod diameter (in)	Approx. weight (kg)	Approx. weight (kg)
LW12-11	Measuring rod	155	6,1	145	5,71	10	0,4	0,6	1,3
LW12-11-RAL	Rallonge	104	4,1	90	3,54	15	0,6	0,9	2,2

HYDRAULIC TOOLS

HYDRAULIC PUMP WITH ELECTRICAL MOTOR AND ELECTRIC CONTROL ON TROLLEY

FUNCTION AND USE

The hydraulic pump with electrical motor supplies hydraulic power, via an insulated hose, to the cylinder of a tool, such as a hydraulic press for example, fitted with a ball type couplers.

FEATURES

Single-acting hydraulic pump driven by an electrical motor.
The unit can be mounted on a metal base or frame or be portable.

- Hydraulic pump :
- Operating pressure: 700 bar / 10 000 PSI
- Pressure port: : quick hydraulic coupling
- Electrical motor:
- Nominal voltage: 24 V.
- Power supply: From a 24V DC source.
- Power cable (optional):
- Power cable length: 5 m / 16 ft. 4 in.
- Connection: Connection clamps or bipolar plug.
- Unit Control:
- Manual and electric.
- Control cable lenght : 5 m / 16 ft. 4 in
- Dimensions: 550 x 950 x 450 mm / 22 x 37 x 18 in

Catalog No.	LW13-01-PHEC

MANUALLY-OPERATED HYDRAULIC PUMP WITH PETROL ENGINE

FUNCTION AND USE

Petrol engine unleaded 4 stroke hydraulic pump generating a pressure of 700 bars / 10 000 PSI.
Manual hydraulic distributor control.

FEATURES

Single-cylinder Honda GHX50 engine with manual start. Single-acting double-speed hydraulic pump.
Pressure gauge for direct reading of pressure. Oil tank with vent and sight glass. Engine fitted with low engine oil sensor. Tubular chassis with 4 rubber pads.

- Nominal Pressure : 700 bars / 10 000 PSI
- Flow rate : 2,35L/min (LP) - 0,55L/min (HP) - 0.621 gal /min (LP) - 0.145 gal/ min (HP)
- Engine : single-cylinder 50cc, 4 strokes, air-cooled.
- Fuel : Unleaded 95 or 98 tank 0,9L / 30 oz
- Hydraulic oil : TOTAL Equivis XV 32
- Power : 1,8kW (2,5BHP) at 7000 rpm
- Starter : recoil
- Control : 3 positions hydraulic distributor
- Quick coupling CEJN 115
- Weight : 15,4 kg / 34 lbs
- Dimensions : 337 x 280 x 397 mm / 13 x 11 x 16 in

Catalog No.	SH700-5

700BARS HYDRAULIC FOOT PUMP

FUNCTION AND USE

Hydraulic foot pump generating a pressure of 700 bars / 10 000 PSI.

FEATURES

Support plate which gives great stability.
For use with single-acting hydraulic tools.
Automatic pressure release at 700 bars / 10 000 PSI.
Case for transportation optional.

- Nominal pressure : 700 bars / 10 000 PSI
- Flow rate < 20 bars : 20 cm³ / stroke - 1.22 in³ / stroke
- Flow rate > 20 bars : 2 cm³ / stroke - 0.12 in³ / stroke
- Tank: 1,5L oil / 0,33 gallons
- Quick coupling CEJN 115
- Weight : 10 kg / 22 lbs
- Dimensions : 690 x 200 x 180 mm / 27 x 8 x 7 in

Catalog No.	PH700-5

700BARS HYDRAULIC PUMP WITH 220V AC ELECTRIC MOTOR

FUNCTION AND USE

220V electric hydraulic pump generating a pressure of 700 bars / 10 000 PSI.

FEATURES

Designed for intensive use: S3 / S6 service of 40%
(example: crimping capacity with an XP130 head: 6 lugs of 185 mm² per minute).
550 W single-phase 220 V 50 Hz motor with starting capacitor (starting on load).
Automatic engine stop at 700 bars / 10 000 PSI. Safety valve against the risk of overpressure.
Thermal circuit breaker for protection against electric motor overload.
Very robust monobloc plastic shell: IP 55.
Emergency manual release and manual piston retraction.
Optional transport case.

- Nominal Pressure : 700 bars / 10 000 PSI.
- Flow rate : 0,8L/min - 0.21 gal/min
- Tank : 2L oil / 0.53 gal
- Hydraulic oil supplied: TOTAL Equivis XV 32
- Quick coupling CEJN 115
- Weight : 17 kg / 37,4 lbs
- Dimensions : 380 x 200 x 420 mm / 15 x 7 x 16.5 in
- Sound level : < 80 db(A)

Catalog No.	EH706-5

Hydraulic pump EH706 delivered with :	
82801	2 buttons wired remote control 3m
82809	Insulating oil bottle XV32 0,5L / 17 oz.
FUSE5X20-0A16	Fuses (x2)

700BARS HYDRAULIC 18V BATTERY PUMP

FUNCTION AND USE

Hydraulic pump with 18V Li-Ion 5A battery generating a pressure of 700 bars / 10 000 PSI.
Designed for intermittent operation.

FEATURES

ON/OFF button for switching tool on.
Led indicator : battery power load level, cycle indication, maintenance.
400W electrical motor with automatic stop at 700 bars / 10 000 PSI.
Auto OFF after 10 minutes of inactivity.
Electronic and mechanical protection in the case of overpressure or overheating.
Pump fitted with a hydraulic quick coupling.
Robust plastic shell with IP 42 protection level.
Emergency manual pressure release.
Hydraulic reservoir drain or fill plug.

- Nominal Pressure : 700 bars / 10 000 PSI.
- Flow rate : 1L/min – 0,15L/min - 0.2642 gal/min - 0.0396 gal/min
- Tank : 0,8L oil / 27 oz
- Hydraulic oil supplied: TOTAL Equivis XV 32
- Quick coupling CEJN 115
- Weight : 5,7 kg / 12,5 lbs.
- Dimensions : 330 x 160 x 250 mm / 13 x 6 x 10 in

Catalog No.	BH702N-5

Hydraulic pump BH702N supplied with :	
AB18LI500 x2	18V Batteries Li-Ion 5A with power load indicator
AC18220	Intelligent fast charger for Li-Ion batteries 10,8-18V
82801	2 buttons wired remote control 3m / 9 ft 10in.
82809	Insulating oil bottle XV32 0,5L / 17 oz.
BANDOULIEREBP	Carrying strap
CP-BH702N	Reinforced plastic case

CRIMPING TOOL 130KN «C» HEAD PORTABLE

FUNCTION AND USE

Electrohydraulic crimping tool for cables up to 300mm².
Industrial and electrical networks applications.

FEATURES

Open C head, rotation >180°.
Double switch control : advance, hold, retract.
Safety lock on switch button.
Cycle control and crimp validation.
Tool life management and maintenance cycle.
Hydraulic double speed for optimised operation.
Batteries large capacity 18V 5A with power load indicator.

- Force : 13 TON / 28 660 lbs
- Stroke : 26 mm / 1”
- Weight : 6,5 kg / 14,33 lbs
- Dimensions : 400 x 75 x 310 mm / 16 x 3 x 12 in

Tool control by double tilting switches and lock.
Communicating InteLED system and work area lighting.
Robust housing covered with a non-slip layer.
Hanging ring for shoulder strap.
Delivered with 2 batteries 18V Li-Ion 5A with power load indicator, Intelligent fast charger for Li-Ion batteries 10,8-18V and plastic carrying case can contain 24 dies sets.

Catalog No.	**BP13026**

Applications	Connectors type	Die	C130 
Industrial CU & AL	NF C20-130 Hexagonal : CT,XCT,CU,MJ		6 - 300 mm²
	NF C20-130 Indent : CT,XCT,CU,MJ		10 - 240 mm²
	NF C63-061 Bi-Metal Cu-Al : ACX,ICAU		35 - 300 mm² E140 - E260
	Forged lugs : HU		16 - 150 mm² E180
	High Intensity lugs : HUR,DPD7		16 - 400 mm²
LV insulated networks	Preinsulated : MJPB, CPTA, EJAS, ERP		6 - 240 mm² E140 - E280
	Junctions : MJPAS, JAS4R		50 - 150 mm² E260
	Junctions : MJTAS, XN8S		50 - 240 mm² E215 - E280
LV-MV uninsulated networks	AAC Aluminium alloy : JL, ABT, CBO		22 - 228 mm² E100 - E280
	ACSR conductors : JAR, ABAR		17,8 - 181,6 mm² E54 - E250
	Copper conductors : JU		7,07 - 182 mm² E54 - E230
Rounding	Pre rounding cables Cu ou Al		25 - 300 mm²
Earthing lines	C connectors : CC, RCC		C6 - C150 mm²
	Earthing lugs : CDCT		75 - 240 mm²
Cu & Al DIN standard	DIN 48083 Cu lugs		10 - 400 mm² K4 - K38
	DIN 48083 Al lugs		25 - 400mm² K4 - K38

INSULATED HYDRAULIC FLEXIBLE HOSE

FUNCTION AND USE

The insulating hydraulic hose is used to connect a hydraulic pump or unit to a receiver, such as, for example :

- a hydraulic pulling ram
- a hydraulic press
- a hydraulic tool.

FEATURES

Orange-coloured synthetic hose. Transparent plastic sleeve.
End caps and quick connect couplers, male and female, in corrosion-protected metal. Tee connection, in corrosion-protected metal.
Hydraulic oil supplied: TOTAL Equivis XV 32

Catalog No.	Designation	Lenght (m)	Lenght (ft. In.)	Ø (mm)	Ø (in)	Working pressure (bar)	Working pressure (PSI)	Approx. weight (kg)	Approx. weight (lbs)
LW13-07-200	Hydraulic hose	2	6 ft. 6 in.	14,5	0,57	700	10 000	0,7	1,5
LW13-07-400	Hydraulic hose	4	13 ft. 1 in.					1,2	2,6
LW13-07-760	Hydraulic hose	7,6	24 ft. 11 in.					2	4,4
LW13-07-RBM	Quick connect nipple	-	-	-	-	-	-	-	-
LW13-07-RBF	Quick connect coupling	-	-	-	-	-	-	-	-
LW13-07-TR	Tee connection	-	-	-	-	-	-	-	-

HYDRAULIC CABLE CUTTER

FUNCTION AND USE

This hydraulic cable cutter is used to cut all types of conductor. It can be connected with hydraulic pump either by a foot-operated pump, or by an electrical hydraulic pump or by a petrol engine pump, via insulated hydraulic hose.
Hydraulic cable cutters must only be used with pumps whose reservoirs are filled with approved insulating oil.
Before removing or connecting the insulating hose, user must check that the piston of the hydraulic shears is fully retracted and that the motor of the hydraulic pump is switched off .
Supplied in metal carrying case.

Catalog No.	**XC30W-5U**

FEATURES

Universal end fitting in aluminum alloy protected against U-type attachment for working remotely from the pole end.
corrosion.
Body, cylinder and blades in corrosion-protected metal.
Maximum length: 370 mm / 14,5”
Cutting capacity: 228 mm² / 450 KCMIL
Can cut various types of cable: ACSR / Aluminum / …
Blades opening : Ø30mm /1,18”
Quick coupling CEJN 115

Operating pressure: 700 bar / 10 000 PSI
Approximate weight: 3.3 kg / 7,2 lbs
Mechanism : Single acting with spring return.

HYDRAULIC CRIMPING TOOLS 700 BARS 130KN «C» HEAD

FUNCTION AND USE

Compact, powerful hydraulic press for crimping connectors up to 300 mm² (600 KCMIL).

FEATURES

C-head with anti-corrosion coating.
Tool equipped with a hydraulic quick nipple which connects to 700 bar (10 000 PSI) hydraulic hoses and pumps.
Force : 13 TON / 28 660 lbs
Travel : 26 mm / 1”
Hexagonal crimp : 6-300 mm² / 11-592 KCMIL
Quick coupling CEJN 115
Dimensions : 215 x 70 x 125 mm / 8 x 3 x 5 in
Weight : 3,8 kg / 8,3 lbs

Catalog No.	**XP13026-5**

C130 DIES SETS

INDUSTRIAL

Cu Cable Hexagonal crimp Lugs and junctions	Sections (mm²)	Width (mm)	C130
NF C20-130 : XCT, XG7T, CT, CU, MJ	4	-	-
	6	9	C130HFCU6L9
	10	9	C130HFCU10L9
	16	9	C130HFCU16L9
	25	9	C130HFCU25L9
	35	12	C130HFCU35L12
	50	12	C130HFCU50L12
	70	12	C130HFCU70L12
	95	12	C130HFCU95L12
	120	12	C130HFCU120L12
	150	12	C130HFCU150L12
	185	12	C130HFCU185L12
	240	12	C130HFCU240L12
	300	12	C130HFCU300L12
	400	9	C130HFCU400L9*
	500	-	-
	630	-	-
	800	-	-
	1000	-	-

** 13038 only*

Cu Cable Indent crimp Lugs and junctions	Sections (mm²)	Width (mm)	C130
NF C20-130 : XCT, XG7T, CT, CU, MJ	Indent 10-50	-	C130PFCU10-50
	Indent 70-120	-	C130PFCU70-120
	Indent 150-240	-	C130PFCU150-240
	Indent 300-400	-	-
	Indent 500	-	-
	6	-	-
	10	9	C130HFCU10L9
	16	12	C130HFCU16L9
	25	12	C130HFCU25L9
	35	12	C130HFCU35L12
	50	12	C130HFCU50L12
	70	16	C130HFCU70L12
	95	16	C130HFCU95L12
	120	16	C130HFCU120L12
	150	22	C130HFCU150L12
	185	22	C130HFCU185L12
	240	22	C130HFCU240L12
	300	-	C130HFCU300L12
	400	-	C130HFCU400L9*
	500	-	-

Al Cable Hexagonal crimp Al/Cu lugs	Sections (mm²)	Width (mm)	C130
NF C63-061 : ACX, ICAU	35	9	C130E140L9
	50	18	C130E140L18
	70	9 18	C130E173L9 C130E173L18
	95		
	120		
	150	9 18	C130E235L9 C130E235L18
	185		
	240		
	300	9	C130E260L9

Cu Cable Hexagonal crimp Forged lugs	Sections (mm²)	Width (mm)	C130
HU	16	10	C130E180L10
	25		
	35		
	50		
	70		
	95		
	120		
	150		
	185	-	-
	240	-	-
	300	-	-
	400	-	-
	500	-	-

Cu Cable Hexagonal crimp High intensity lugs	Sections (mm²)	Width (mm)	C130
HUR, DPD7	16	12	C130HFCU50L12
	25		
	35		
	50		
	70	12	C130HFCU150L12
	95		
	120		
	150		
	185	12	C130HFCU240L12
	240		
	300	9	C130HFCU400L9
	400		

C130 DIES SETS

ELECTRICAL NETWORKS

Al Cable Hexagonal crimp Preinsulated Iconnectors	Sections (mm²)	Width (mm)	C130
MJPB, MJPT, MJT, EJPT, MJPBAS, CPTA, CPTAU, EJAS, DPCNA, DPCNU, EDASCNA, EDASCNU, ERP	6	9	C130E140L9
	10		
	16	9	d16 C130E140L9 d20 C130E173L9
	25		
	35		
	50	9	C130E173L9
	54,6		
	70		
	70N		
	95		
	120	9	C130E215L9
	150		
	185	9	C130E280L9
	240		

Al Cable Hexagonal crimp Insulated junctions	Sections (mm²)	Width (mm)	C130
MJPAS, MJPASE, JAS4R	50	9	C130E260L9
	70		
	95		
	150		

Al Cable Hexagonal crimp Insulated junctions	Sections (mm²)	Width (mm)	C130
MJTAS, MJTASE, EJASE, XN8S	50	9	C130E215L9
	70		
	95		
	150		
	240/95N	9	C130E280L9

Al Cable Hexagonal crimp Alu alloy conductors	Sections (mm²)	Width (mm)	C130
JL, CN2A, QN2A, ABT, CD, CB, CBO, AT, RDB	22	18	C130E100L18
	34,4	18	C130E120L18
	43,1	14	C130E140L14
	54,6		
	75,5	14	C130E173L14
	93,3		
	117	10	C130E210L10
	148	10	C130E230L10
	181,6	9	C130E250L9
	228	5	C130E280L5

CU Cable Hexagonal crimp Junctions	Sections (mm²)	Width (mm)	C130
JU	7,07 (30/10 mm)	18	C130E54L18
	9,6 (35/10 mm)	18	C130E68L18
	10,8		
	12,56 (40/10 mm)		
	12,4	18	C130E72L18
	14,1		
	15,9 (45/10 mm)		
	19,63 (50/10 mm		
	17,8	18	C130E83L18
	22		
	27,6		
	28,26 (60/10 mm)	18	C130E100L18
	29,3		
	38,2		
	38,46 (70/10 mm)		
	48,3	18	C130E120L18
	59,7	14	C130E173L14
	74,9		
	93,3		
	116	18	C130E215L18
	146		
	182	10	C130E230L10

Al Cable Hexagonal crimp ACSR conductors	Sections (mm²)	Width (mm)	C130
JAR, JALR, JLR, ABAR, ABLR	Crimp on steel		
	17,8	10	C130E54L10
	22		
	27,8		
	34,4		
	43,1		
	37,7	10	C130E72L10
	54,6		
	58,9	10	C130E100L10
	80		
	69,3	10	C130E72L10
	88		
	59,7	9	C130E120L9
	116,2		
	75,5		
	147,1		
	181,6	5	C130E135L5
	228	-	-
	Crimp on aluminium		
	17,8	9 18	C130E120L9 C130E120L18
	22		
	27,8		
	34,4		
	43,1	14	C130E140L14
	37,7		
	54,6		
	58,9	14	C130E173L14
	80		
	69,3		
	88		
	59,7	10	C130E210L10
	116,2		
	75,5	10	C130E230L10
	147,1		
	181,6	5	C130E250L5
	228	-	-

Cu & Al Cable Prerounding	Sections (mm²)	Width (mm)	C130
	6	-	-
	10	-	-
	16	-	-
	25	35	C80MR25L35
	35	35	C80MR35L35
	50	60 35	C130MR50L60 C80MR50L35
	70	60 35	C130MR70L60 C80MR70L35
	95	60 35	C130MR95L60 C80MR95L35
	120	70 35	C130MR120L70 C80MR120L35
	150	70 35	C130MR150L70 C80MR150L35
	185	75 35	C130MR185L75 C80MR185L35
	240	75 35	C130MR240L75 C80MR240L35
	300	60	C130MR300L60

EARTHING

Cu Cable C connectors	Sections	Width (mm)	C130
CC, RCC	C6	9	C130HFCU10L9
	C10	9	C130HFCU25L9
	C16	12	C130HFCU70L12
	C25-10	12	C130HFCU95L12
	C25PM		
	C25	12	C130HFCU150L12
	C25EGM		
	C35		
	C50		
	C70-35	18	C130CC70L18
	C70		
	C75	9	C130CC95L9
	C95-35		
	C95		
	C120	5	C130CC150L5
	C150		
	C185-95		
	C185	-	-
	C240	-	-

Cu Cable Hexagonal crimp Earth lugs	Sections (mm²)	Width (mm)	C130
CDCT	75	14	C130HCT75L14
	95	14	C130HCT95L14
	116	14	C130HCT116L14
	147	12	C130HCT147L12
	181	12	C130HCT181L12
	240	12	C130HCT240L12

Cu Cable Hexagonal crimp Earth lugs	Sections (mm²)	Width (mm)	C130
DPD7 29/25	25/29	18	C130E100L18

DIN STANDARD

Cu & Al Cable Hexagonal crimp Lugs and junctions	Sections (mm²)		Width (mm)	C130
DIN 48083	Cu 4			
	Cu 6			
	Cu 10		12	C130K6L12
			12	C130K7L12
			5	C130K7L5
	Cu 16		14	C130K8L14
			14	C130K9L14
			5	C130K9L5
	Cu 25		12	C130K10L12
	Cu 35	Al 25	12	C130K12L12
			14	C130K13L14
	Cu 50	Al 35	12	C130K14L12
			12	C130K15L12
	Cu 70	Al 50	12	C130K16L12
	Cu 95	Al 70	12	C130K18L12
			12	C130K19L12
	Cu 120		12	C130K20L12
			12	C130K21L12
	Cu 150	Al 95-120	14	C130K22L14
	Cu 185	Al 150	14	C130K25L14
			14	C130K27L14
	Cu 240	Al 185	14	C130K28L14
			5	C130K30L5
	Cu 300	Al 240	5	C130K32L5
		Al 300	5	C130K34L5
	Cu 400	Al 400	9 18	C130K38L9 C130K38L18
	Cu 500		-	-
	Cu 630	Al 500	-	-
			-	-
	Cu 800	Al 630	-	-
	Cu 1000	Al 800	-	-
		Al 1000	-	-

NOTES

MISCELLANEOUS

HYDRAULIC OIL « TOTAL EQUIVIS XV 32 »

FUNCTION AND USE

Hydraulic oil specifically designed for use in hydraulic systems in order to power hydraulic tools. The oil is used to power hydraulic tools and is considered conductive.

Transmission fluid in hydraulic power packs, insulating hose lines, hydraulic cylinders, presses, cutters, etc.

It is recommended a label identifying the oil used, should be attached to the hydraulic equipment being used.

Une étiquette mentionnant le nom de l'huile isolante utilisée doit être collée sur le matériel hydraulique.

FEATURES

The oil is packaged in 5L / 1-gallon cans or 20L / 4 Gallons. Viscosity of the insulating oil: 32.

Catalog No.	Designation
LW14-01-05	5 l / 1 gal.canister
LW14-01-20	20 l / 4 gal. canister

TIE-BACK CONNECTOR

FUNCTION AND USE

The Tie-back connector is used as an auxiliary part, to temporarily secure a conductor without mechanical tension.

It is used, for example, for :

- To prepare the connection of a jumper by means of a coupling other than a ringed connector.
- Hold flapped down on the conductor a jumper whose end is not equipped with a ringed connector.

It is used on copper and aluminium conductors.

It is not to be used to assume an electrical connection; its use is temporarily only.

FEATURES

Clamping capacity of the jaws: from 12.5 mm² (#6) to 250 mm² (490 kcmils), which corresponds to wires or cables with a diameter between 4 mm (.16") and 18 mm (0,71").

Dimensions: 250 x 120 x 35 mm / 9.8 x 4.7 x 1.4 in.

Approximate weight: 1 kg / 2,2 lbs.

Catalog No.	**LW14-02**

RING SPANNER

FUNCTION AND USE

The ring spanner is used to screw or unscrew any ring connectors such as tie back connectors, jumper connectors, etc…

FEATURES

Handle made of insulating tube, fiberglass over the foam core.

Lightweight alloy recess 30mm (1,18") grip ring.

Handle diameter: 39 mm / 1½"

Handle length: 120 mm / 4,72"

Approximate weight: 0.2 kg / 0,44 lbs.

Catalog No.	**LW14-03**

SILICONE CLOTH

FUNCTION AND USE

The silicon cloth is used to siliconize the insulating parts of tools, insulated blankets and protectors. Soiled or worn-out rags should be disposed of or destroyed and replaced. They should never be washed.

FEATURES

Silicone impregnated brushed cotton.

Minimum width: 0.30 m / 11,8"

Minimum length: 0.40 m / 15,75"

Catalog No.	**TC53**

PRODUCT CLEANING

FUNCTION AND USE

The cleaning product is used to remove dirt remaining on the surface of tools and equipment after washing with soap and water.
The cleaning agent must not remain in contact with the objects to be cleaned for a long period of time, especially with elastomer objects.

FEATURES

Liquid degreasing solvent, colourless 1L / 33 oz.

Catalog No.	Designation
LW14-05-AB	Rubbing alcohol (or Ethanol 90 PG)
LW14-05-AS	ASOREL CN
LW14-05-VI	VIATOM.SID N
LW14-05-SO	SOCOCLEAN A2519

RUBBER CLEANER

FUNCTION AND USE

Professional cleaner for dirty rubber surfaces, quick drying. Developed for insulating rubber material (e.g. long insulating gloves GICN80 page 3).

FEATURES

200 ml (6.7 oz) spray bottle ready to use.
Specifically developed to properly clean the rubber from dirt and dust. It is recommended to wipe with a microfibre or disposable cloth.

Catalog No.	Designation
RGX-1704/200	200 ml (6.7 oz) bottle
RGX-1704/200/12	1 Box of 12 bottles

DANGER ZONE INDICATOR

FUNCTION AND USE

Positioned at regular intervals of approximately 3 to 5 m (9 ft. 10 in. to 16 ft. 4 in.) on the lower and/or outer bare conductor of a live line.
This signalling tool enables a third party to work in proximity to a specified zone.
This indicates a minimum approch distance of 5m /16 ft. 4 in. On live lines with voltage superior to 50kV.
For work sites lasting more than 7 days due to the risk of pollution, the signalling tools must be cleaned and resiliconized every 7 days.

FEATURES

2 insulating rods Ø 10 mm (.4") in orange and black colour, size 2m (9'10") and 3m (6'6").
Clamp, Male and Female bayonet coupling system and weight made of corrosion-protected metal.
Dimensions (after assembly of all parts):
Overall length: 5.26 m /17 ft. 3 in.
Insulating width: 4.78 m / 15 ft. 8 in.
Approximate weight: 2 kg / 4,4 lbs.
Clamping capacity
- Diameter: 10 to 35 mm / .4" to 1,38"
- Conductor cross-section: up to 570 mm² (1124 kcmils).

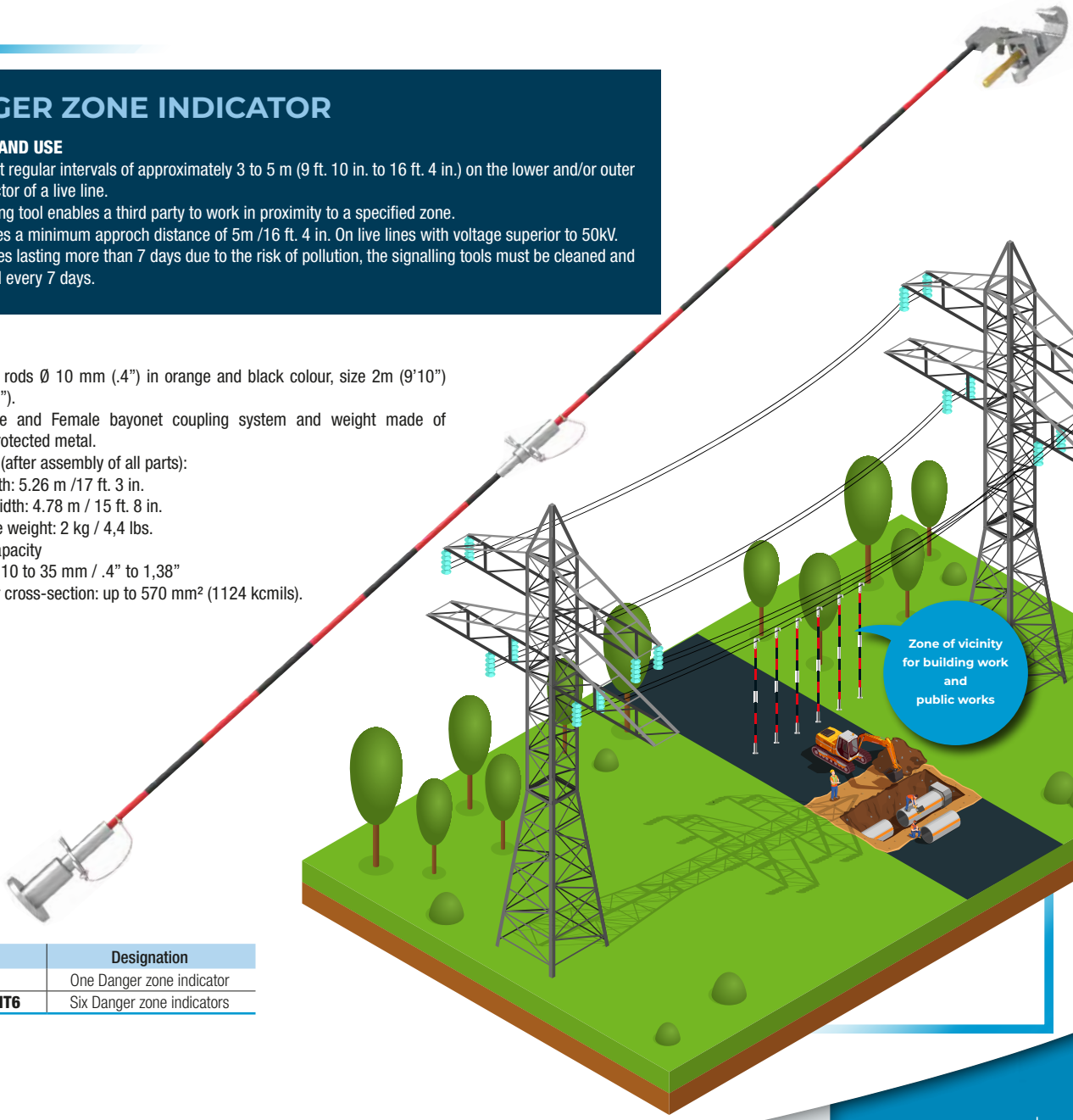

Catalog No.	Designation
LW14-07	One Danger zone indicator
LW14-07-KIT6	Six Danger zone indicators

TOOL BOX

FUNCTION AND USE
Attached to the edge of the bucket, the tool box is used to store small tools and accessories waiting to be used.
The insulated rod attached to the exterior of a tool box can be used to hold sticks whilst not in use.

FEATURES
Body in synthetic material, equipped with two hanging lugs.
Dimensions (L x W x H): 430 x 350 x 350 mm / 16.9 x 13.8 x 13.8 in.
Approximate weight: 3.5 kg / 7,72 lbs - Maximum working load: 20 daN / 44lbs.

Catalog No.	LW14-09

ROD SUPPORT RACK

FUNCTION AND USE
Hung on the edge of a bucket or on the hook of a service rope, the rod rack is designed to hold up to six lock-out tag-out temporary switch control rods waiting for assembly or disassembly.

FEATURES
Synthetic body equipped with two lugs for bucket attachment, with a suspension slot to receive the control rods and a hole for the service rope hook.
Dimensions (L x W x H): 340 x 185 x 130 mm / 13.4 x 7.3 x 5.1 in.
Approximate weight: 1 kg / 2,2 lbs.
Working Load Limit (WLL): 6 daN / 13,2 lbs.

Catalog No.	LW14-08

STICK HANGER

FUNCTION AND USE
Attached to the edge of the bucket, the stick hanger is used to hang up sticks waiting to be used.

FEATURES
Body made of synthetic material, equipped with a suspension bar and hanging brackets.
Dimensions (L x W x H): 400 x 100 x 150 mm / 15.7 x 3.9 x 5.9 in.
Approximate weight: 0.4 kg / 0,88 lbs.

Catalog No.	LW14-10

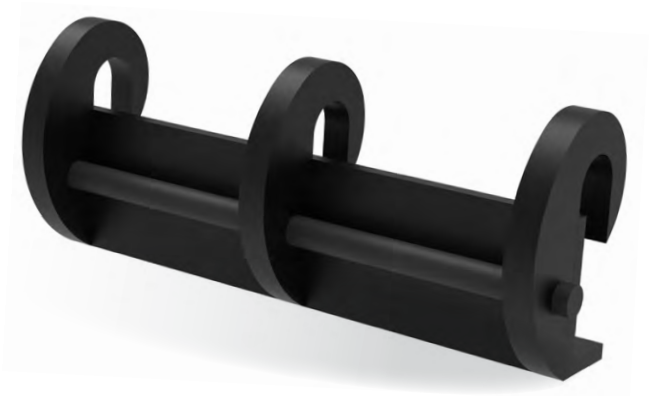

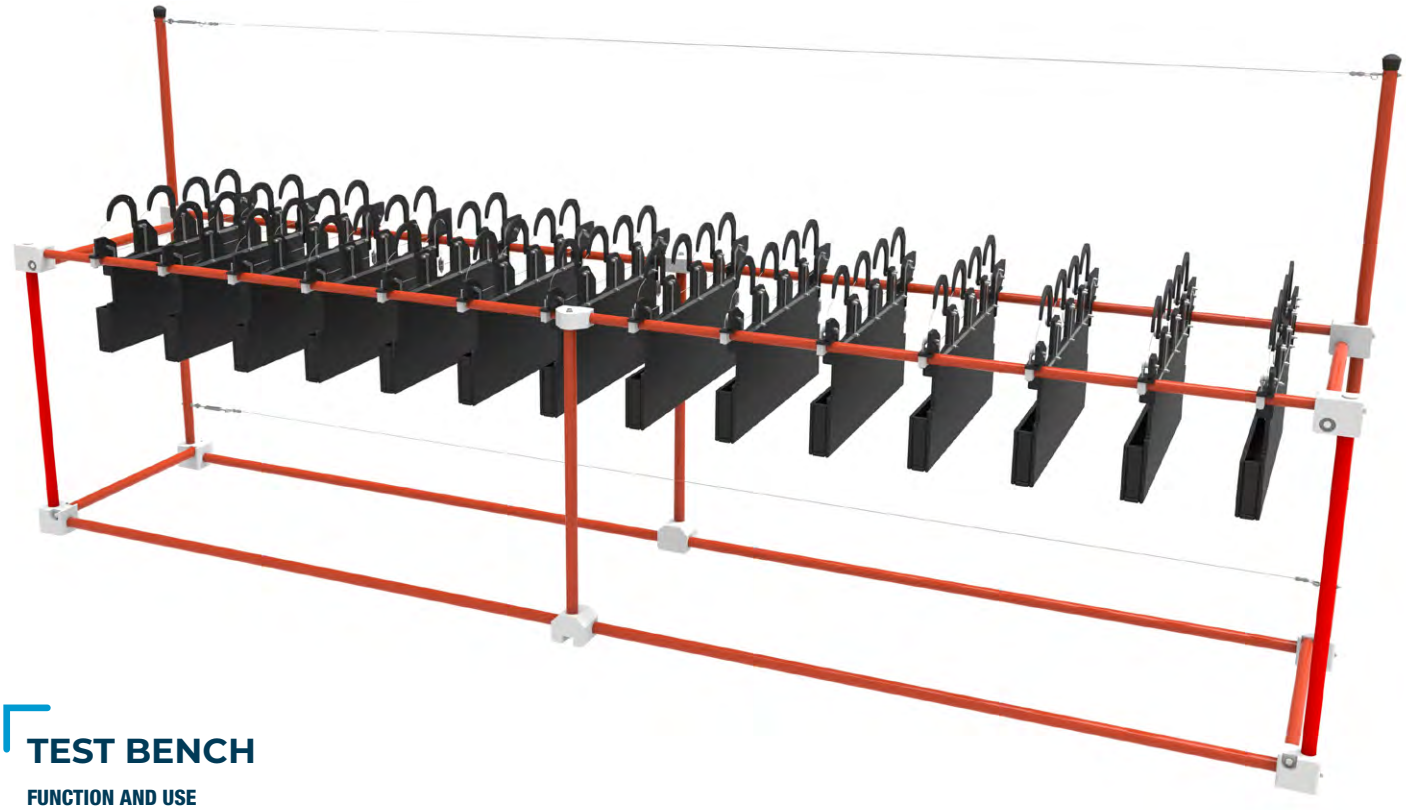

TEST BENCH

FUNCTION AND USE

The test bench is used to check the dielectric characteristics of insulating tools, during their periodic inspection. Connected to a high voltage source, it allows up to 4 tools to be subjected simultaneously to the desired voltage.
This test bench allows visual control of the test during its execution.
Quick wiring system every 300 mm (12”).
Included in the bench 14 in total.

FEATURES

Made of reinforced fibreglass tube and plastic for the insulating parts. Pole support, connection device and metal wheels. Wiring device to accommodate 4 poles.
Spacing of brackets for applying tension: 300 mm (1’).
Standard length = 4.5 m / 14 ft. 9 in.
Maximum length on request = 6.5 m / 21 ft. 3 in.
Dimensions of standard model: 4700 x 1950 x 900 m/ 185.0 x 76.8 x 35.4 in.
Approximate mass: 150 kg / 330 lbs.

Catalog No.	LW14-11

Accessory: quick wiring system

Catalog No.	LW14-11-CR

VTA-3625-1

HH1

HH2

HH3

VYNIL TOOLS APRON

FUNCTION AND USE

The vinyl tool aprons are the ultimate organizer for tools, sockets, dies, bits, and materials. They are constructed with high quality vinyl coated nylon surrounding a sturdy canvas core.
The aprons have an additional leather wear guard on the top for contact with the bucket. Aprons are available with numerous hanger, holder and pocket configurations.
Contact us for further information on apron dimensions and hooks.

FEATURES

Apron made in vinyl coated nylon.
The apron is held onto the bucket with hooks.
HH1 polymer hanger hook for 3” wide bucket lip.
HH2 polymer hanger hook for 2,25” wide bucket lip.
HH3 polymer hanger hook with blanket tip for 3” wide bucket lip.

Catalog No.	Designation
LW14-VTA-2425-1	Tool apron (24”x25”)
LW14-VTA-3625-1	Tool apron (36"x25")
LW14-HH1	Polymer hanger hook for 3” wide bucket lip
LW14-HH2	Polymer hanger hook for 2,25” wide bucket lip
LW14-HH3	Polymer hanger hook with blanket tip for 3” wide bucket lip

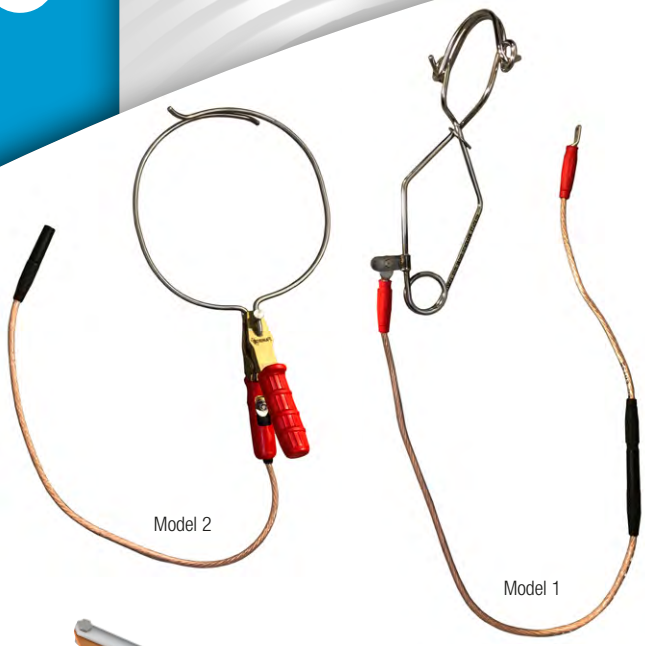

BONDING CLAMP

FUNCTION AND USE

Used by linemen working on EHV structures. Serves as an equipotential connection.
This clamp is used to connect, hold and disconnect the conductive garment at the potential of the phase on which the operator is working. Once in place, the clamp can move over the conductor, to give the operator freedom, without unexpectedly disconnecting.
Limitation of use to networks with a voltage below 400 kV. The model 1 can be used on 20kV for the bare hand method with the insulated bucket truck France Elevateur TBI 172.

FEATURES

Range of use of clamp model 1: from ø0 to ø75 / ø0" to 2,95"
Dimensions of clamp model 1: 340 x 120 x 100 mm / 13.4 x 4.7 x 3.9 in.
Approximate weight = 0.4kg / 0,88 lbs.
Potential setting clamp model 1, for cable, equipped with a 1m (3'3") braid in 2 parts.
Range of use of clamp model 2: from ø75 to ø200 / 2,95" to 7,87"
Clamp size model 2: 420 x 230 x 120 mm / 16.5 x 9.1 x 4.7 in.
Approximate weight = 0.8 kg / 1,76 lbs.
Potential setting clamp model 2, for bars, equipped with a 1m (3'3") braid in 2 parts.
Characteristics of the braid: Copper ø6 mm (.24") insulated.
Length: approx. 1m (3'3") including lugs.
The braid is made up of two parts joined by a connector in the middle.

Catalog No.	**LW14-13-1** (Model 1)

Catalog No.	**LW14-13-2** (Model 2)

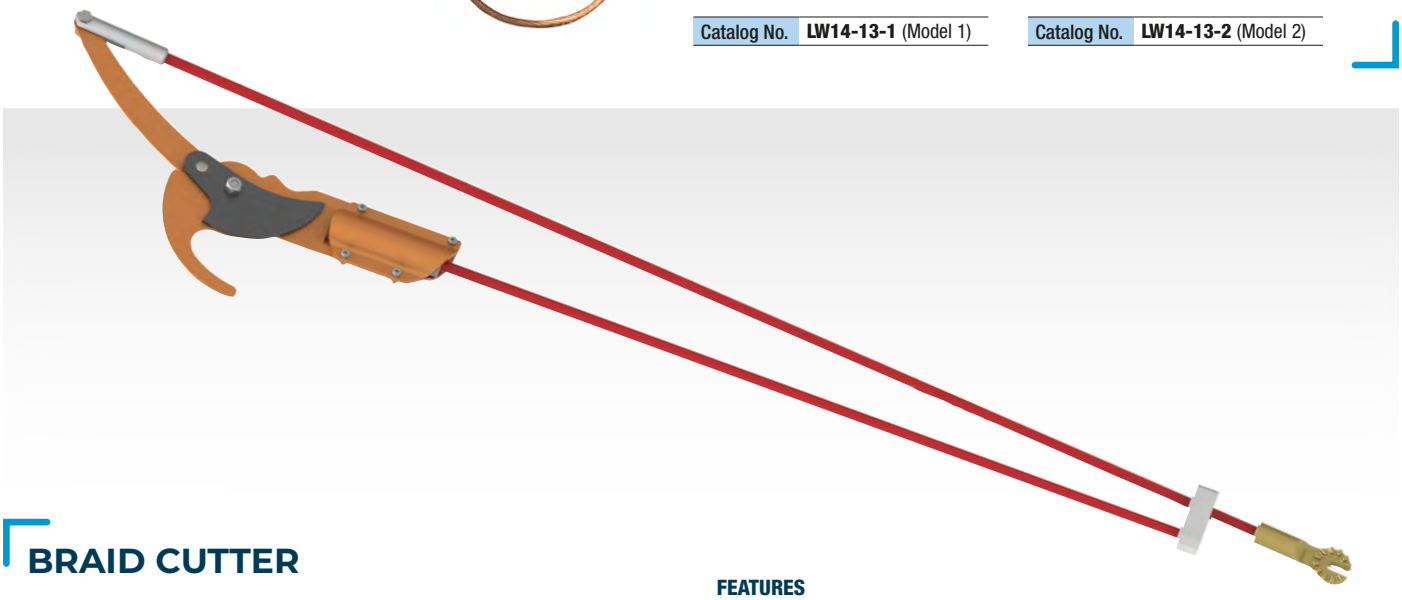

BRAID CUTTER

FUNCTION AND USE

The braid cutter is used to remotely cut off the operator's bonding clamp in the event of an incident in order to remove him from his workstation.
It also allows the operator's securing rope to be cut, should it prevent the operator's escape.

Catalog No.	**LW14-12**

FEATURES

Insulating control rod with universal end fitting and insulating rod with sliding tip, made of synthetic material, orange in colour. Fixed jaw, movable jaw and joint lever made of corrosion-protected metal. Delivered with a protective cover.
Total length: 1.15 m / 3 ft. 9 in - Rod diameter: 10 mm / 0,4"
Approximate weight: 1 kg / 2,2 lbs.
The cutting head of the braid cutter is conductive.
Dimensions (L x W x H): 290 x 160 x 40 mm / 11.4 x 6.3 x 1.6 in.

ANCHOR ROD

FEATURES

Forged steel anchor post, 28 mm (1,1") octagon with shaped head.
Diameter: 28 mm (1,1")
Length: 1.50 m / 4 ft. 11 in.
Weight: 7.5 kg / 16,5 lbs.

Catalog No.	**PI145**

SUSPENSION HOOK

FUNCTION AND USE

Suspension hook for tube Ø32 (1 ¼”) and Ø39 (1 ½”)
Orange PVC coated steel hook with insulated wing nut

Catalog No.	Designation
49638299	Suspension hook for tube Ø32 / 1 ¼”
49638300	Suspension hook for tube Ø39 / 1 1/2”

KITMASTICTST

KITVERNISTST

STICK REPAIR KIT

FUNCTION AND USE

The filler kit is used when the stick has substantial impacts which could affect the intregrety of the tube.
Supplied with instruction for use. The varnish kit is used to restore surface integrety of the stick. Supplied with instruction for use.

Catalog No.	Designation
KITMASTICTST	Filler Kit
KITVERNISTST	Varnish Kit

REPLACEMENT PARTS FOR CLAMPSTICK

Catalog No. for round tube	Catalog No. for pentagonal tube	Designation
KTETEPCTCR	**KTETEPCTPECR**	Hook pole head with integrated suspension hook and tube screw
CSTUPCT		Suspension hook to be inserted into the hook pole head
VTPCT		Screw for hook pole head
KGJPCT	**KGJPCTPE**	Rod guide for hook pole with tube screw
KGMPCT	**KGMPCTPE**	Hand guard for hook pole with tube screw
VGPCT		Guide screw and hand guard for clampstick
KPOIPCT		Clampstick handle with spring and screws
KVPPCT		Handle screws for hook pole
BE31		Rubber cap
KCREMPCT		Lock bar and safety stop with screws for clampstick
KJCPCT200		Hook ring kit for LW03 -01-32-200 and LW03-02-32P-200
KJCPCT260		Hook ring kit for LW03-01-32 260 and LW03-02-32P-260
KJCPCT320		Hook ring kit for LW03-01-32- 320 and LW03-02-32P-320
KJCPCT380		Hook ring kit for LW03-01-32-380 and LW03-02-32P-380

Hooked pole head

Rod guide

Handguard

Handle

Hook and eye

NOTES

SHORT-CIRCUITING AND EARTHING

SMAPE

USE

The unique concept is based on a mechanism with a choice of a conventional or magnetic key and without the need for energy.

- In the magnetic version without key penetration, the opening is obtained by means of a key with a magnetic code that activates the moving parts of the cylinder without any mechanical contact.
- The entire coded module located in the cylinder is lined and completely sealed.
- This new version is particularly suitable for difficult environments: corrosion, sand, humidity, frost, vandalism, etc.

GROUNDING SYSTEM WITH CLAMP / VICE SERVO-CONTROL

FUNCTION AND USE

IEC 61230

- Guarantees a safe gesture to avoid electrification, the system carries the installation and removal procedure allowing each step to be respected without error.
- Ensures that the malt is held in the event of a short circuit by controlling the clamping force of the vice, which is conditional on the key being released and locked.
- Non-copyable and trapped keys

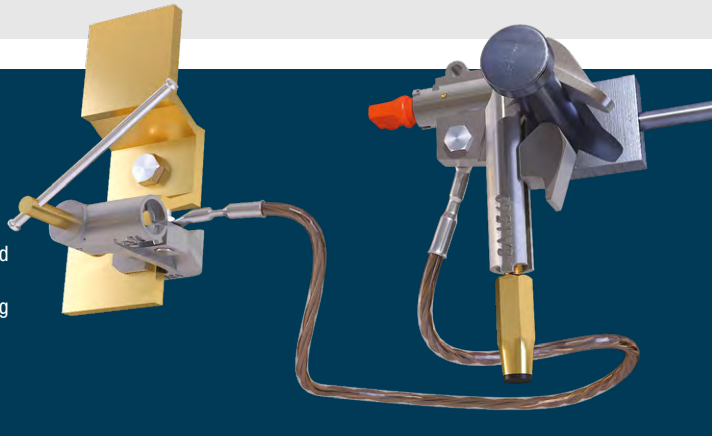

CLAMP

SA342

3-42” LINE TYPE
- ICC Max: 40 kA/1s
- Clamping capacity : Ø 3 to 42 mm / Ø 0.12” to 1.65”
- Weight: 1.2 kg / 2.65 lbs
- Code: P0

SAF220

120-200” SUBSTATION TYPE
- ICC Max: 40 kA/1s
- Clamping capacity : Ø 120 to 200 mm / Ø 4.72” to 7.87”
- Weight: 3.2 kg / 7.05 lbs
- Code: P4

SA1560

LINE / POSITION TYPE
- ICC Max: 40 kA/1s
- Clamping capacity : Ø 5 to 60 mm / Ø 0.2” to 2.36”
- Weight: 1.3 kg / 2.87 lbs
- Code: P1

SANB2025

PEAK/SPEED POST TYPE
- ICC Max: 31.5 kA/1s
- Ball clamping capacity : Ø 20 and 25mm / Ø 0.79” and 0.98”
- Weight: 0.750 kg / 1.65 lbs
- Code: P5

SAP20120

20-120” STATION TYPE
- ICC Max: 40 kA/1s
- Clamping capacity : ø 20 to 120 mm / Ø 0.79” to 4.72”
- Weight: 1.6 kg / 3,53 lbs
- Code: P2

SAE200

LINE TYPE “3-42
- ICC max: 31.5 kA/1s,
- Weight : 2.2 kg / 4.85 lbs
- Clamping capacity :
  - flat bar: up to 100 mm / 3.74”
  - vertical bar: 30 x 100 mm / 1.18” x 3.74”
  - horizontal bar: 60 x 100 mm / 2.36” x 3.74”
  - cylindrical bar: ø 10 to 70 / 0.39” to 2.76”
- Code: P6

SAP1060

10-60” LINE TYPE
- ICC Max: 31.5 kA/1s
- Clamping capacity : Ø 10 to 60 mm / Ø 0.39” to 2.36”
- Weight: 1.3 kg / 2.87 lbs
- Code: P3

SMA342

LINE ANCHOR TYPE
- ICC max: 31.5 kA/1s,
- Weight (kg): 2.2 kg / 4.85 lbs
- Clamping capacity on round (mm) : Ø 3 to 42 mm / Ø 0.12” to 1.65”
- Code P7

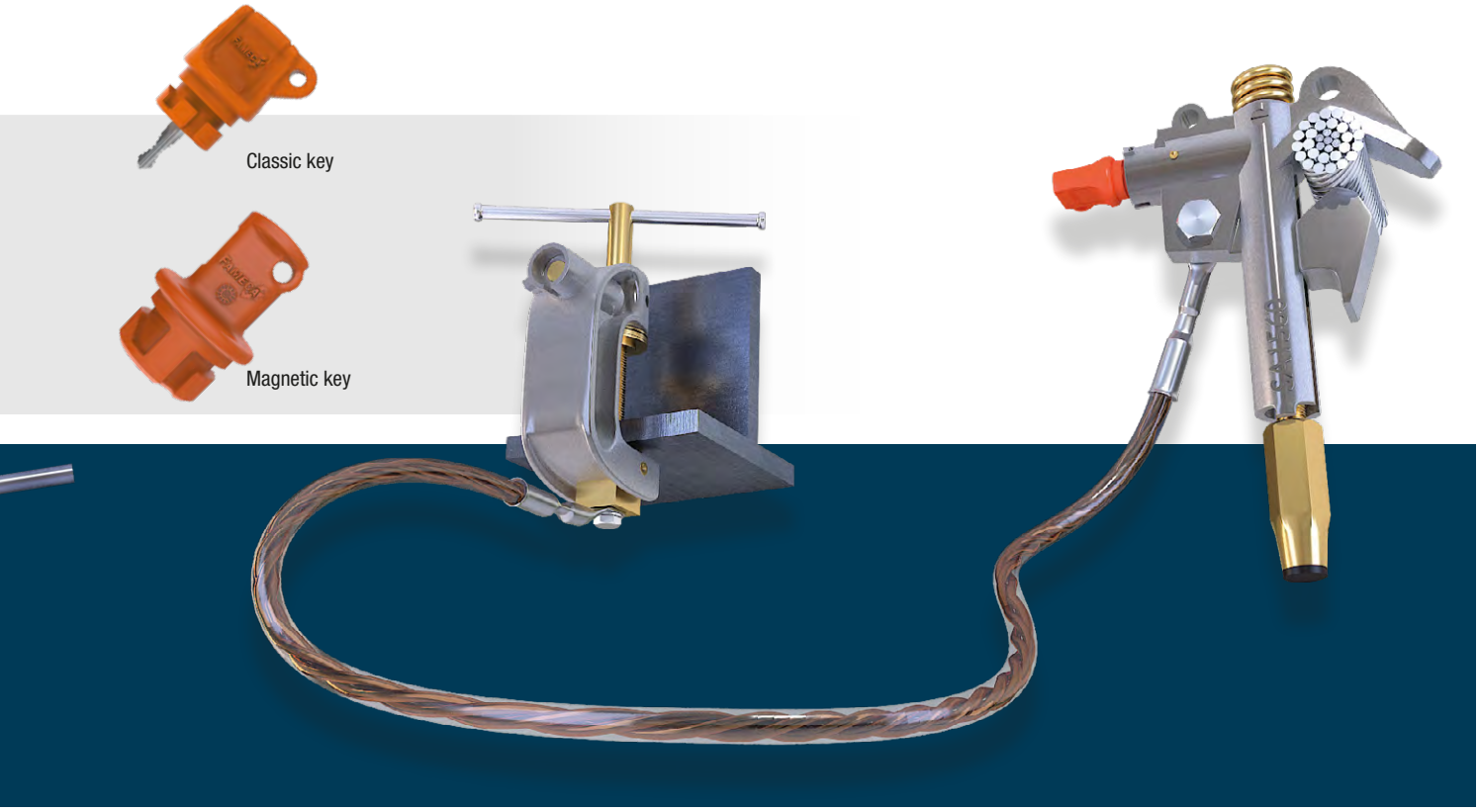

VICE

SAGTE25

- ICC Max: 40 kA/1s
- Clamping capacity on flat : 40 mm / 1.57”
- Weight: 1.8 kg / 3.97 lbs
- Code: GT

SANB33S

- ICC Max: 40 kA/1s
- Clamping capacity on flat : 35 mm / 1.38”
- Weight: 1.2 kg / 2.65 lbs
- Code : N3

SANBCRTTS

- ICC Max: 40 kA/1s & 63 kA/0.5s
- Clamping capacity on flat : 30 / 1.18”
- Weight: 1.2 kg / 2.65 lbs
- Code: NC

SANBE2025

- ICC Max: 40 kA/1s
- Ball clamping capacity : 35 mm / 1.38”
- Weight: 1.2 kg / 2.65 lbs
- Code: NB

END-FITTINGS

AN

B

HE

X46

AP

SMAPE

GROUNDING SYSTEM WITH CLAMP / VICE SERVO-CONTROL

Sets of 1 pair of clamp and vice without cable and with one key per pair

	References		Pliers	Vices	Type of gripper tip
	Classic	Magnetic			
POST	**S1P1HNC**	**S1P1HNCMA**	SA1560 	SANBCRTTS 	HE
	S1P1BNC	**S1P1BNCMA**			B
	S1P1XNC	**S1P1XNCMA**			X46
	S1P2HNC	**S1P2HNCMA**	SAP20120 		HE
	S1P2BNC	**S1P2BNCMA**			B
	S1P2XNC	**S1P2XNCMA**			X46
	S1P4HNC	**S1P4HNCMA**	SAF220 		HE
	S1P4BNC	**S1P4BNCMA**			B
	S1P4XNC	**S1P4XNCMA**			X46
	S1P1HN3	**S1P1HN3MA**	SA1560 	SANB33S 	HE
	S1P2HN3	**S1P2HN3MA**	SAP20120 		
	S1P4HN3	**S1P4HN3MA**	SAF220 		
POST PIC / PIGME	**S1P5VNC**	**S1P5VNCMA**	SANB2025 	SANBCRTTS 	AP
	S1P5HNC	**S1P5HNCMA**			HE
	S1P5BNC	**S1P5BNCMA**			B
	S1P5VNB	**S1P5VNBMA**		SANBE2025 	AP
	S1P5HNB	**S1P5HNBMA**			HE
	S1P5BNB	**S1P5BNBMA**			B
LINE	**S1P0AGT**	**S1P0AGTMA**	SA342 	SAGTE25 	AN
	S1P0XGT	**S1P0XGTMA**			X46
	S1P0BGT	**S1P0BGTMA**			B
	S1P0HGT	**S1P0HGTMA**			HE
	S1P1AGT	**S1P1AGTMA**	SA1560 		AN
	S1P1XGT	**S1P1XGTMA**			X46
	S1P1BGT	**S1P1BGTMA**			B
	S1P1HGT	**S1P1HGTMA**			HE
	S1P3AGT	**S1P3AGTMA**	SAP1060 		AN
	S1P3BGT	**S1P3BGTMA**			B
	S1P3HGT	**S1P3HGTMA**			HE
	S1P7AGT	**S1P7AGTMA**	SMA342 		AN / HE / B

SMARE

SHORT-CIRCUITING AND EARTHING

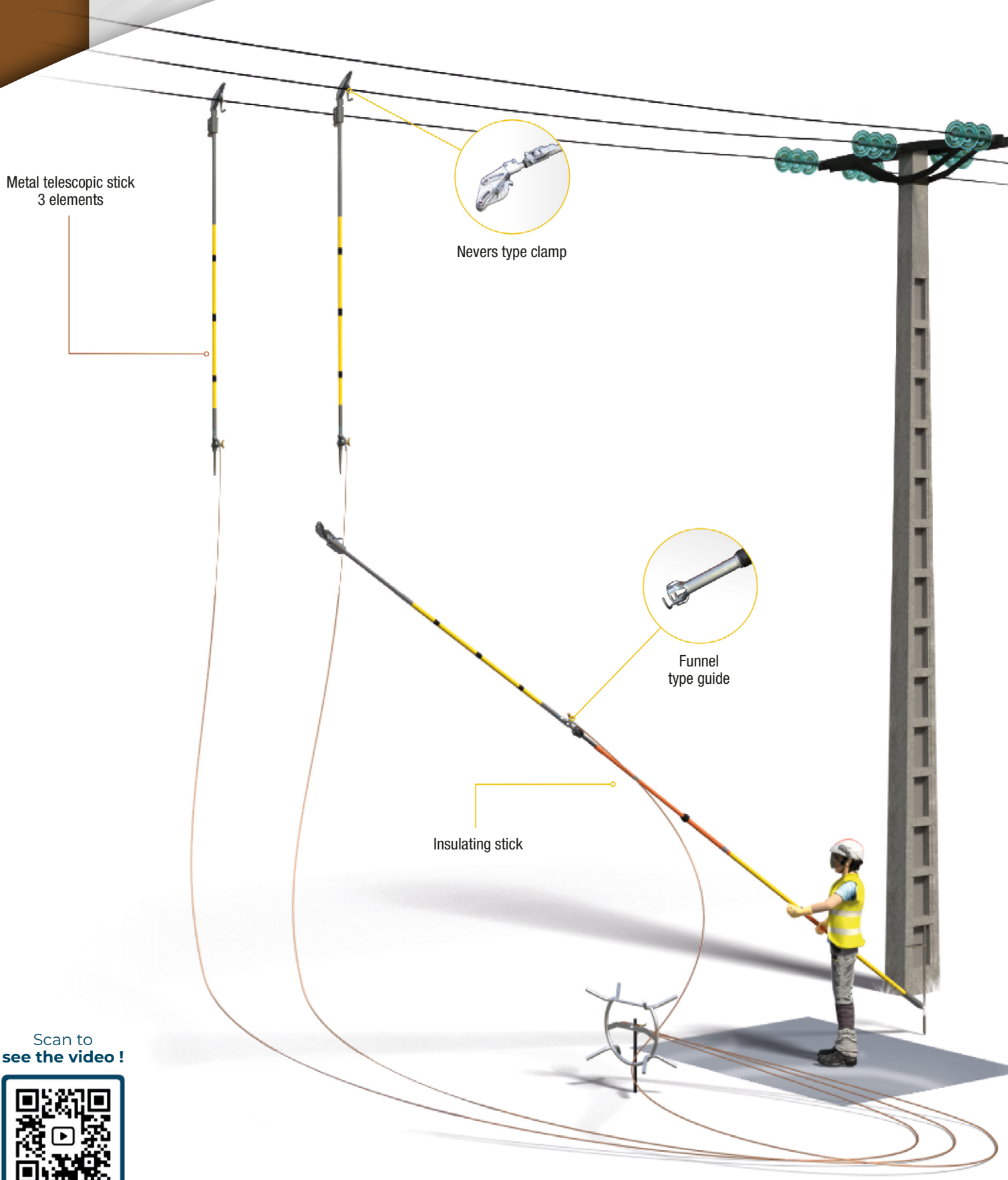

Scan to
see the video !

SCAN ME

NEVERS

EARTHING AND SHORT-CIRCUITING EQUIPMENT FOR BARE AERIAL NETWORKS

FUNCTION AND USE

IEC 61230

The Nevers device allows a single man t o perform:

- Checking that there is no voltage.
- Earthing and short-circuiting of overhead lines up to 11.50 m (37 ft. 8 in.) in height, on bare overhead MV networks from the grounddu sol

FEATURES

- Max. permissible Icc: 8 kA/1s.
- Clamping capacity on cylindrical conductors from 3 to 22 mm (0.12" to 0.87") diameter (7 to 380 mm² / 13 to 750 KCMIL).
- Telescopic metal poles with clamps for quick and calibrated tightening, with built-in cleaning rings.
- Insulating poles made of 3 glass fibre elements on foam type IEC 60855, with reinforced connection by flush mounting.
- Optional insulating extension (NE18ER) to 11.5m / 37 ft. 8 in.
- Mounting of a voltage tester at the foot of the metal pole before earthing.
- To be used with TAG200 or MTAG voltage detectors (detector not supplied).
- Removable pole clamp and foot.

3 ELEMENTS

Catalog No.	Designation
PA3GTI	NEVERS equipment complete with metal poles in 3 parts

This product contains	Designation
NE10	Telescopic metal poles in 3 elements L folded 2,20 m (7'2") - L unfolded 5,45 m (17'10")
NE17E	Top part of insulating pole
NE18E	Lower part of the insulating pole
NE19E	Lower boom extension
NE20	Guide tulip
NE21	Reel equipped with 3 x 10 m (3 x 32'9") of 35 mm² (70 KCMIL) copper cable and an earth clamp
NE24	Laminated canvas cover
701	Hexagonal earth stake

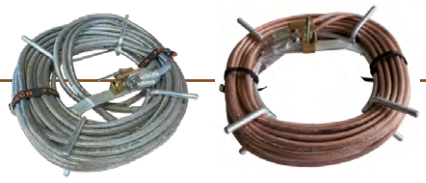

ACCESSORIES

Options	Designation
NE12	Gripper NE 10
NE18ER	Additional extension, to be inserted between NE18 and NE 19
NE38	Embout de préhension NE 11
NE14	Automatic clamp
NE22	Reel not wired
NE25	1 set of 3 braids 35mm² (70 KCMIL) L:10m (32'9")
NE27	Maintenance kit for metal poles
NE28	Maintenance kit for insulating poles
NE21ALU	3 x 10 m (32'9») reel of 70 mm² (138 KCMIL) aluminium cable and an earth clamp

4 ELEMENTS

Catalog No.	Designation
PA4GTI	NEVERS equipment complete with metal poles in 4 parts

This product contains	Designation
NE11	Telescopic metal poles in 4 elements L folded 1,64 m (5'4") - L unfolded 4,85 m (15'10")
NE20	Guide tulip
NE17E	Top part of insulating pole
NE18E	Lower part of insulating pole
NE19E	Lower boom extension
NE21	Reel equipped with 3 x 10 m (32'9") of 35 mm² (70 KCMIL) copper cable and an earth clamp
701	Hexagonal earth stake
NE24	Laminated canvas cover
NE23	Pole lifter

SHORT-CIRCUITING AND EARTHING

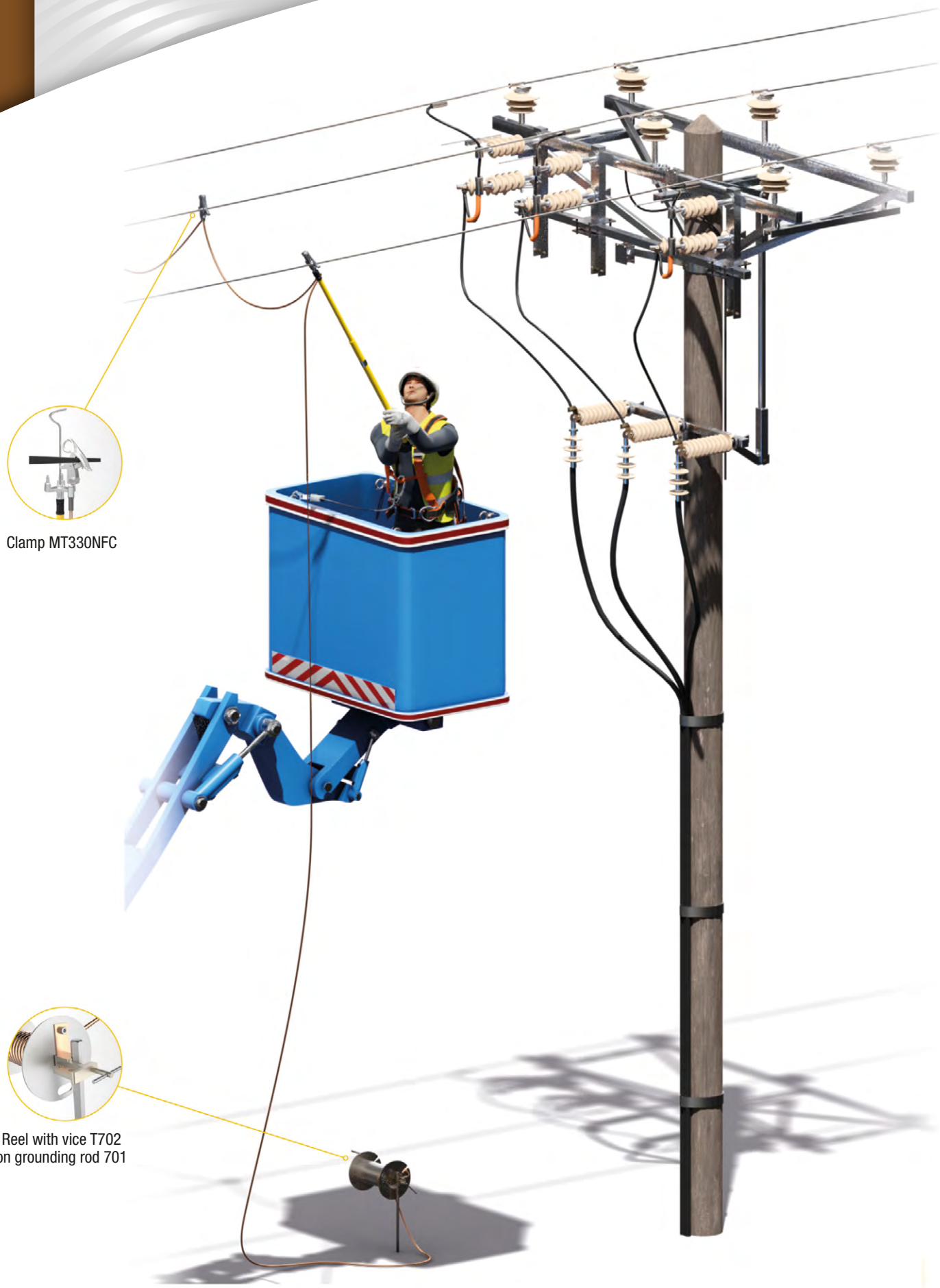

EY322NG

EARTHING AND SHORT-CIRCUITING DEVICE WITH SPRING CLIPS

FUNCTION AND USE

IEC 61230

The EY322NG short-circuiting and earthing device is intended for 3- wire bare overhead distribution networks (HVA).

It is installed from the pylon support.

The MT330N phase clamps are spring-loaded, pre-armed clamps that automatically clamp to the conductor. They consist of an aluminium alloy body and jaw.

The aluminium clamp plate supports the 3 MT330N clamps. It is equipped with an APV (12mm hexagon) to fit the pole and a hook to remove the clamps.

FEATURES

MT330N collet capacity: from Ø3mm to Ø32mm / from 0.12" to 1.26").

The equipment consists of :

- 3 MT330N clamps connected by 2 short-circuit cables.
- 2 short-circuit cables (lengths and cross-sections specified in the table)
- 1 reel with 16 mm² / 31 KCMIL earth cable, length 16m (52'5") and integrated clamp (applies to EY3221NG and EY3222NG)
- 1 cable reel that can be attached to the earth rod, with 35 mm² / 70 KCMIL earth cable, length 16m / 52'5" (only applies to EY3222NG13)
- a grounding clamp (applies to EY3222NG13 only)
- 1 tray with 3 clamps equipped with an APV (12mm (0.5") hexagon) and a hook,
- 1 earth stake, length 1 m (3'3"),
- 1 pole.

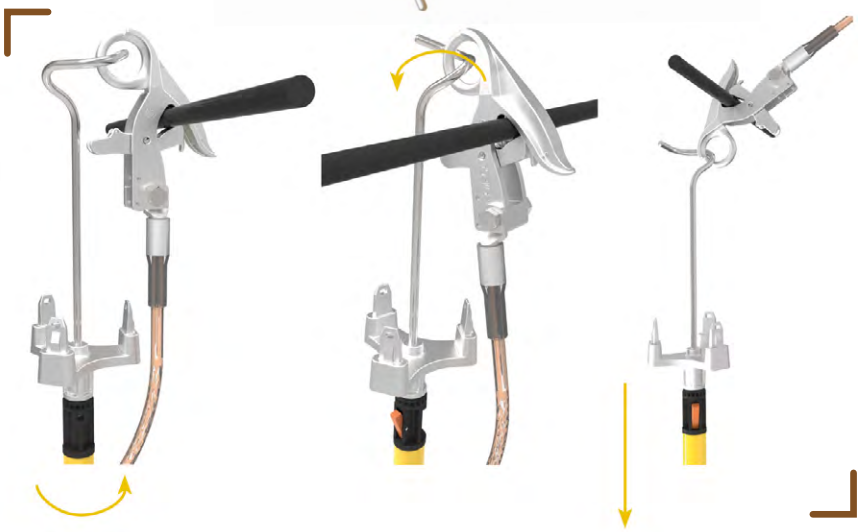

Catalog No.	Icc	Short-circuit cable section (mm²)	Length of short-circuit cable (m)	Length of short-circuit cable (ft.)	Approx. weight (kg)	Approx. weight (lbs)
EY3221NG	8 kA/1s	35	2,75	9	15	33,1
EY3222NG	8 kA/1s	35			15	33,1
EY3222NG13	13 kA/1s	50			18	39,7
EY322NG18	18 kA/1s	70			20,5	45,2

The set is packaged in:

- 1 metal box (for EY3221NG and EY3222NG)
- 1 bag (applies to EY3222NG13 only)
- 1 waterproof canvas case containing the pole and stake.

Catalog No.	Accessories
MT330N	Phase clamps
PEY3AP	Aluminium clamp plate with APV end cap
T7021616	Reel with 16 mm² / 201 KCMIL earth cable
NB8	Earth clamp
TR276APV	Perch
TD386	Metal case
HMALT	Bag
HTR11100	Waterproof canvas case containing the pole and stake

SCREW-ON FOR BARE PLIERS AERIAL HTA NETWORKS

FUNCTION AND USE

IEC 61230

Allows the short-circuiting and earthing of a bare overhead network from the pole.

FEATURES

- Tightening on line conductors from 3 to 32 mm (0.12” to 1.26”).
- Maximum permissible short circuit current: 25 kA /1 s.
- Material: aluminium
- The central clamp can be equipped with one or two perches to carry one or two other phase clamps.

Catalog No.	Designation	Dimensions (mm)	Dimensions (in)	Weight (kg)	Weight (lbs)
MT535URUCR	Clamp with with eyescrew	44 x 100 x 180	1,7 x 4 x 7	0,62	1,4

DUCKBILL CLAMP

FUNCTION AND USE

IEC 61230

Allows the short-circuiting and earthing of a bare overhead network from the pole.

Lightweight and compact clamp equipped with a spring that allows it to be pre-positioned on the conductor, ensuring that it remains in place even before it is tightened by screwing.

FEATURES

Clamping on line conductors from 3 to 32 mm (0.12” to 1.26”). Maximum permissible short circuit current: 25 kA /1 s.

The clamp can be equipped with a DBCS perch to carry two additional phase clamps.

This perch can be fitted with a TFK type connection with DIN lugs with a 10 mm (0.4”) terminal hole or a connection with cylindrical lugs.

Catalog No.	Designation	Dimensions (mm)	Dimensions (in)	Weight (kg)	Weight (lbs)
DBC332CR	Duckbill clamp with eyescrew	38 x 150 x 170	1,5 x 6 x 6,6	0,6	1,3

NOTES

NOTES

NOTES

ALPHABETICAL INDEX

ALPHABETICAL INDEX

NUMERICAL INDEX

NUMERICAL INDEX

NUMERICAL INDEX

Connect to the reference website

pentaesp.com

The major player in electrical risk prevention electrical risks and equipment for the construction and network management.

You can also find all the news about PENTA :

PENTA

ELECTRICAL SAFETY PRODUCTS

pentaesp.com